OUTENIQUA INTERRASVEILING

VRYDAG, 18 OKTOBER 2024

11H00 TE OUTENIQUA VEILINGSKRALE, GEORGE

VERSKEIE SKAAP- EN BEESRASSE SAL AANGEBIED WORD OP DIE VEILING - DORMERS EN DORPERS WORD VERKOOP ONDER RASBESKERMING

AANBOD:

BEESTE:

HEREFORD
- 1 Bul - SP

SIMMENTALER
- 6 Bulle - SP
- 13 Koeie - SP
- 7 Verse - SP

BORAN
- 1 Bul - SP

ANGUS
- 3 Bulle - SP
- 3 Bulle - Kommersieël
- 35 Jong Rooi Angus Verse - Kommersieël

LIMOUSIN
- 2 Bulle - SP

OUTENIQUA INTERRASVEILING

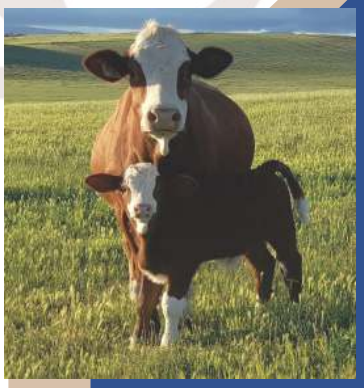

SKAPE:

DORMER
- 19 Ramme - SP
- 27 Ooie - SP
- 2 Ramme - Kommersieël
- 30 Ooie - Kommersieël

SUFFOLK
- 4 Ramme - SP

MEATMASTER
- 5 Ramme - Kommersieël

JAN ERASMUS (BESTUURDER HUMANSDORP)	082 924 6096
BERRIE BOTHA (NAVRAE)	082 440 2763
ORG VISSER (NAVRAE)	082 944 0697
ANDRIE VISSER (BEMARKER)	083 270 5703
FANUS MULLER (BEMARKER)	076 577 6744
AFSLAERS: RENIER ZIETSMAN	082 491 5182
LEN BORNMAN	082 551 6839

KATALOGUS

BKB LEWENDEHAWE & AFSLAERSDIENSTE

Welkom by die veiling.

Welcome to the auction.

It's more than just climate change, it's securing your business's future

Let's help your business get there with FNB Sustainable Finance

Switch to FNB Business

Get the help you need

Terms and conditions apply.

First National Bank A division of FirstRand Bank Limited.
An Authorised Financial Services and Credit Provider (NCRCP20).

2010
Mees Waardevolle Handelsmerk
in Suid-Afrika

2021 - 2022
KMO Bank
van die Jaar
Wereldwyd

Belê in oplossings vir alternatiewe energie

Ons verstaan die uitdagings verbonde aan energiekoste en hoe die verskaffing daarvan besighede landwyd kan beïnvloed. By FNB bied ons finansiering van oplossings vir alternatiewe energie, wat besparings oor die lang termyn kan verskaf én sal help met ononderbroke besigheidsproduktiwiteit.

Praat met ´n verhoudingsbestuurder by jou naaste FNB-tak of stuur ´n e-pos na AlternativeEnergy@fnb.co.za vir meer inligting.

Sluit by #TheChangeables aan

Kry die hulp wat jy nodig het

First National Bank

RULES OF AUCTION - TERMS AND CONDITIONS

1. This auction will be held under the control of BKB Limited (Pty) Limited (hereinafter referred to as the Auctioneer") with business premises situate at: Rhebok Street, Industrial Area, Humansdorp, 6300

2. The Auctioneer is hereby appointed by the Purchaser and Seller to act for and on behalf of the Purchaser and Seller as agent in accordance with Section 54 of the Value-Added Tax Act, 1991, in respect of all tax invoices, credit and/or debit notes in respect of all livestock, game and/or goods offered at the auction or any costs of transport and insurances premiums paid for on behalf of the Purchaser and Seller.

3. The rules of this auction shall comply with the provisions of Section 45 and all relevant regulations to the Consumer Protection Act 68 of 2008.

4. For greater clarity Section 45(1-4) states as follows:

4.1 In this section, "auction" includes a sale in execution of or pursuant to a court order, to the extent that the order contemplates that the sale is to be conducted by an auction. 4.2 When goods are put up for sale by auction, each lot is, unless there is evidence to the contrary, regarded to be the subject of a separate transaction.

4.3 A sale by auction is complete when the auctioneer announces its completion by the fall of the hammer, or in any other customary manner, and until that announcement is made, a bid may be retracted. 4.4 Notice must be given in advance that a lot or sale by auction is subject to:

4.4.1 A reserved or upset price; or
4.4.2 A right to bid by or on behalf of the owner or auctioneer, in which case the owner or auctioneer, or any one person on behalf of the owner or auctioneer, as the case may be, may bid at the auction.

5. Until the fall of the hammer as contemplated in Section 45(3) of the Act, any bid may be retracted or declined by the Auctioneer if not compliant with the regulations of the Consumer Protection Act.

6. The auction is not an absolute auction but subject to reserved prices settled by the sellers and as pointed out by the Auctioneer prior to the sale of the set asset or lot.

7. The auction shall take place at the date and time as advertised or publicised and will not be postponed or delayed to enable any member or group of the public to partake in the auction.

8. Should the Auctioneer become aware of any fault on advertising material or any other publication or amendment to these Rules of Auction, the Auctioneer will prior to the auction point out and when necessary amend such mistakes in the advertisement or publication.

9. Any person attending the auction to enter a bid, must prior to the auction register as a buyer on the bidders' roll and comply with the conditions as set out in Chapter 1 of FICA 2001. The purchaser shall sign the bidders' roll/card.

10. Any person who attends the auction to enter a bid on behalf of another person must be duly authorised thereto by means of a written letter of authority from its principal and such a person together with his principal must both register prior to the auction on the bidders' roll and provide all necessary information as required in Chapter 1 of the regulations issued in terms of FICA 2001 with regard to proof of its identity. The bidders' roll must be signed by such a person and on behalf of its principal.

11. Where the principal is a company the letters of authority shall appear on the letterhead of the company together with a certified copy of a resolution authorizing the person to bid on behalf of the company. (For purposes of this rule any reference to a company will include any reference to juristic person including partnerships, trusts or incorporated entities).

12. All purchasers have a right of inspection of all goods put up for sale and the auctioneer shall provide reasonable time and access prior to the start of the auction for such an inspection.

13. All livestock and goods are sold "voetstoots" and the purchasers do not enjoy the protection of Section 55 and 56 of the Consumer Protection Act.

14. Any information provided regarding the quality, breeding, age, date of insemination, condition, reproductive status or any information regarding health, production or mass or any other aspect of the livestock, is provided by the seller and any misrepresentation by the seller is without the cooperation or knowledge of the Auctioneer. Any right of recourse as a result of such misrepresentation shall be against the seller.

15. Any bid made does not include VAT which, where applicable, will be added to the bidding price for which a VAT invoice will be issued.

16. All sales are for cash and purchase price is payable immediately to the Auctioneer on acceptance of the bid unless otherwise arranged prior to the auction with the Auctioneer. Any payment made in cash is further subject to cash or any other handling fees. Should the Purchaser however fail to make payment within 7 days from date of delivery, BKB will be entitled to add interest calculated at the current bank prime rate plus 5% to the capital amount outstanding. The interest will be calculated monthly and capitalised.

17. Should the purchaser not pay the purchase price immediately and has failed to make arrangements for payment with the Auctioneer, then the Auctioneer can/will cancel the sale and treat the assets or lots as unsold lots which may again be presented on the auction for sale or be sold out of hand by means of liaison services, depending on the sellers mandate to the auctioneer.

18. Ownership in the lot or assets will remain that of the seller until the purchase price has been paid in full to the seller with the provision that the risk in the assets or lot passes to the purchaser at the fall of the hammer as set out in clause 24.

19. In the event that Purchaser has made necessary finance arrangements with BKB, the Purchaser hereby authorises BKB to pay the purchase price or costs of transport, insurance and any other agreed cost, minus BKB's commissions, on behalf of the Purchaser to the Seller and other service providers, in which event the said payment by BKB on behalf of the Purchaser will be deemed to be monies lent and advanced, the terms and conditions thereof being agreed with the Purchaser in a separate credit agreement or sale agreement. All payments made by BKB to the Seller on behalf of the Purchaser in terms of this clause will be made after the lapse of 5 (Five) working days from date of delivery of the asset to the Purchaser. Any payment made by BKB to the Seller prior to the lapse of the 5 (Five) working day period is made at the sole discretion of BKB and not an enforceable indulgence.

20. For as long as any amount is owing to BKB by the Purchaser, the Purchaser may not, where the assets are the subject of security of the Purchasers credit facility with BKB, relinquish possession of the said asset, nor may he cede the asset or any of its rights and obligations in terms of this agreement to a third party or otherwise encumber, sell or dispossess the said asset or allow it to become the subject of any right of retention, hypothec, pledge or any encumbrance, whatever the cause thereof may be. BKB may be entitled to cede its rights and obligations without affecting its rights of recourse for any monies still due to it.

21. In the event of the Seller already being indebted to BKB or any of its affiliates at the time of this auction, the Seller hereby irrevocably authorises BKB to set off the purchase price due to the Seller by BKB (minus BKB's commission) against the amounts due by the Seller to BKB.

22. Where BKB, in terms of a credit agreement, lent and advanced monies to the Purchaser for payment of the purchase price of any asset or payment of any transport costs or insurance premiums, no defence of whatsoever nature which the Purchaser may raise against the Seller or the transport contractor or the insurance company may be raised against BKB and the Purchaser shall still be obligated to pay all amounts owing, together with further interest and costs thereon raised in terms of the credit agreement or sale agreement, to be BKB. The conditions of this clause do not interfere with the rights, entitlements or remedies the Purchaser may have against the Seller, transport contractor or insurance company.

23. Neither the Purchaser, nor the Seller, shall be entitled to apply set-off or to retain any monies owing arising from any claim they may have against each other or BKB with regards to any amount owing in terms hereof. Each lot shall immediately after the fall of the hammer deemed to be delivered to the purchaser at which time the risk will pass to the purchaser who will at his own risk and cost remove the lots or assets from the auction terrain. Removal of any assets or lots however will not be allowed by the Auctioneer until payment of the purchase price by the purchaser or acceptable arrangements for payment thereof have been made by the purchaser with the Auctioneer.

24. Each lot shall immediately after the fall of the hammer deemed to be delivered to the purchaser at which time the risk will pass to the purchaser who will at his own risk and cost remove the lots or assets from the auction terrain. Removal of any assets or lots however will not be allowed by the Auctioneer until payment of the purchase price by the purchaser or acceptable arrangements for payment thereof have been made by the purchaser with the Auctioneer.

25. The Auctioneer will only be obliged to give reasons of the auction if such reasons are other than the voluntary sale of goods by its owners.

26. The bidders' roll and vendor roll will be available for inspection during the normal office hours at the business premises of the Auctioneer.

27. The rules of auction will only be read out at the auction if they were not available to the public at the place of business of the Auctioneer. In the event of livestock and game auctions, the rules of auction remain unchanged and are in general available at the business premises of the Auctioneer or on the website of the Auctioneer.

28. Under no circumstances will BKB be held liable for any loss or damage of any cause whatsoever albeit direct or indirect damages suffered by anyone if the livestock at the auction premises have to be placed under quarantine as a result of the presence of a livestock disease present. In such event BKB will have the right to cancel the auction as well as any already complete sales and no party will be entitled or have a right of recourse against BKB.

29. Any party requiring permits, removal certificate, documentation of identification or any other statutory prescribed document will solely be responsible for obtaining same. Any instructions to an auctioneer with regards to the loading, transporting, choice of transport contractors, insurance or choice of insurers will executed at the sole risk of the person acquiring such services and the Auctioneer will not be held responsible for any losses whether direct or indirect which may be suffered as a result of giving affect to the instructions by the Auctioneer. The Auctioneer however does accept responsibility as contemplated in Section 35(2) of the Consumer Protection Act whilst the goods or lots are in the possession of the auctioneer. Any agreement entered into by the Auctioneer with a transport company or insurer is done so in its representative capacity of the seller or buyer. All transport costs or insurance premiums are therefore payable to the Auctioneer in cash except if acceptable alternative arrangements were made with the Auctioneer.

30. Both the seller and the buyer consent to the jurisdiction of the Magistrate's Court as contemplated in Section 45 of Act 32 of 1944 having regard to any action which the Auctioneer may institute against the buyer or seller irrespective of the cause of action. Notwithstanding the aforesaid the Auctioneer will have the sole and absolute discretion to institute action in any High Court with appropriate jurisdiction.

31. Any legal costs that BKB may have or will incur as a result of the non-compliance of the Purchaser and/or Seller in terms of its or their obligations herein, shall be recoverable by BKB, together with collection commissions from the Purchaser and/or Seller on a scale as between attorney and own client.

32. No variation, amendment, novation or addition to these terms and conditions will have the effect of BKB renouncing any of its rights in terms hereof, unless it is reduced to writing and signed by BKB.

33. No relaxation or indulgence by the Auctioneer must be interpreted as a waiver of any of the Auctioneer's rights in terms hereof. Such relaxation or indulgence must also not be interpreted as a novation hereof.

34. Should any condition be unlawful or become retrospectively unlawful, that unlawful condition shall be deemed to be amended to the extent and in the manner as is necessary to make it lawful or should such amendment be impossible, the unlawful conditions shall be deemed devisable from the remainder of the conditions and pro non scripto.

35. The cattle scale despite being calibrated, is not verified in term of the Legal Metrology Act.

36. The weight as displayed for each lot is an unverified indication of average weight and may not be relied on for purposes of entering a bid.

37. All sales of livestock are sales per head of cattle and not per kilogram

38. Rules of auctions and term and conditions in other languages can be asked for.

Skaap / Sheep

LOT NR 1				
Verkoper	**Beskrywing**	**Aantal**	**Koper**	**Prys**
Ducron Farms	Dormer Ram SP	1		

***AJC 230097**

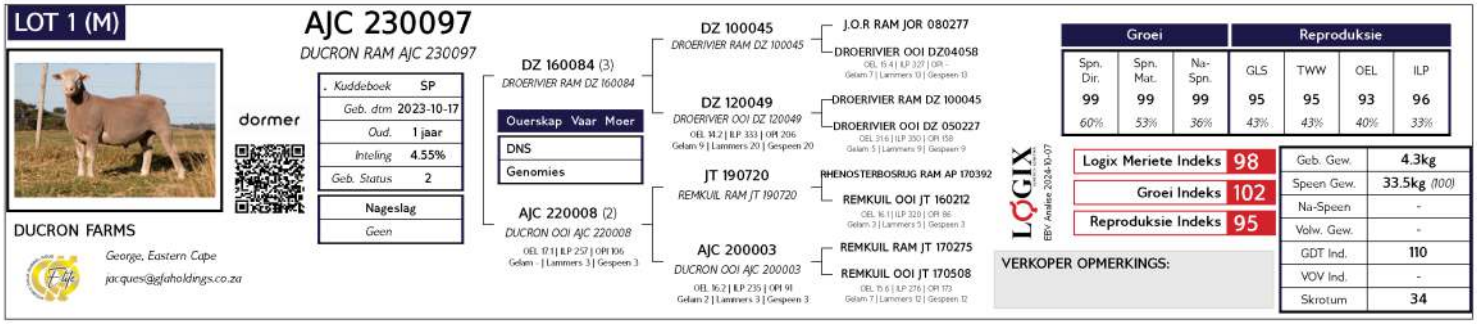

LOT NR 3				
Verkoper	**Beskrywing**	**Aantal**	**Koper**	**Prys**
Ducron Farms	Dormer Ram SP	1		

***AJC 230070**

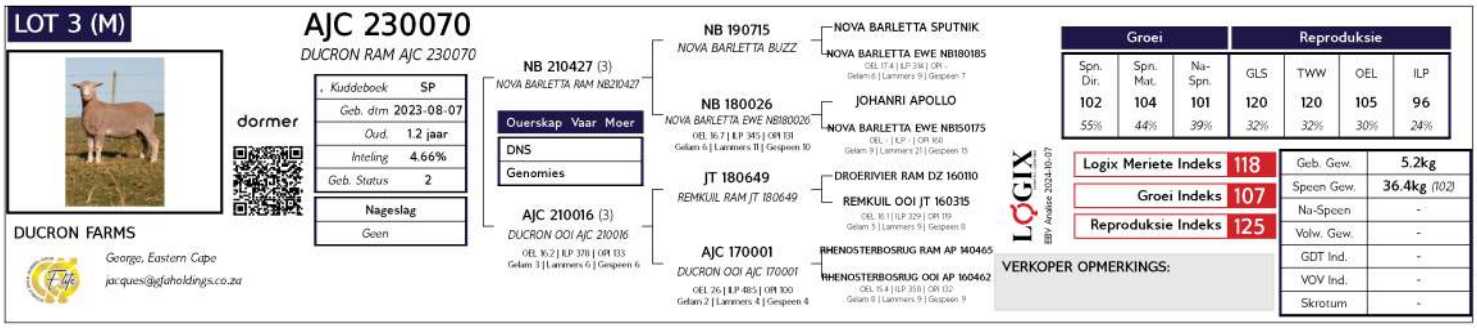

LOT NR 5				
Verkoper	**Beskrywing**	**Aantal**	**Koper**	**Prys**
Ruswater (FJ Kruger)	Dormer Ram SP	1		

***RW 230064**

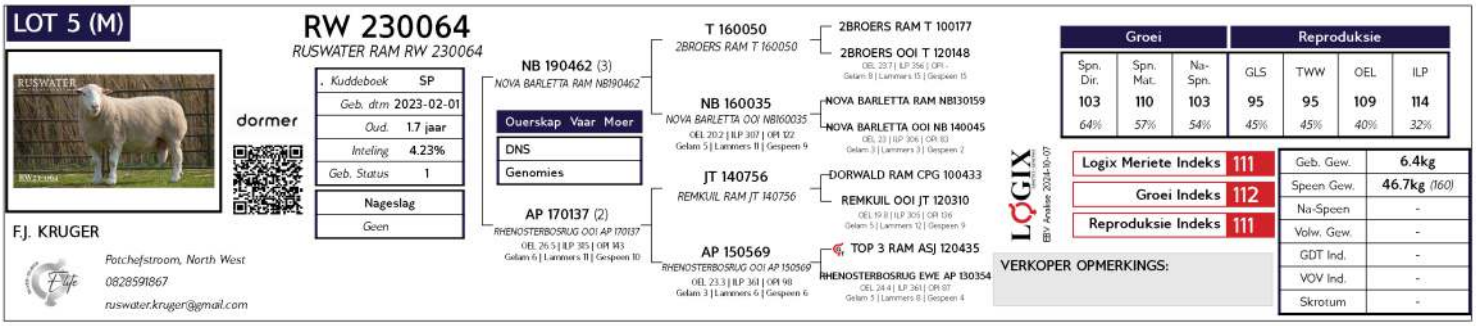

LOT NR 6				
Verkoper	**Beskrywing**	**Aantal**	**Koper**	**Prys**
Ruswater (FJ Kruger)	Dormer Ram SP	1		

***RW 230132**

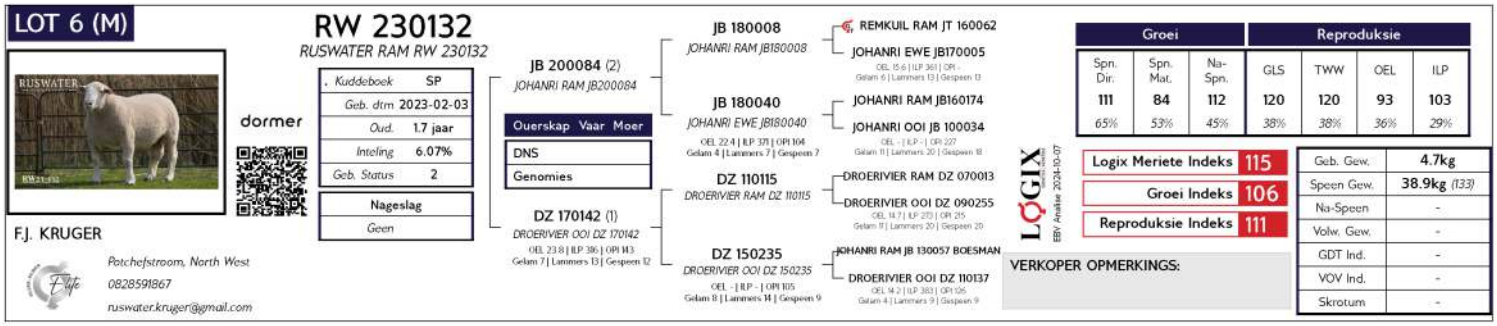

LOT NR 7				
Verkoper	**Beskrywing**	**Aantal**	**Koper**	**Prys**
Ruswater (FJ Kruger)	Dormer Ram SP	1		

***RW 230240**

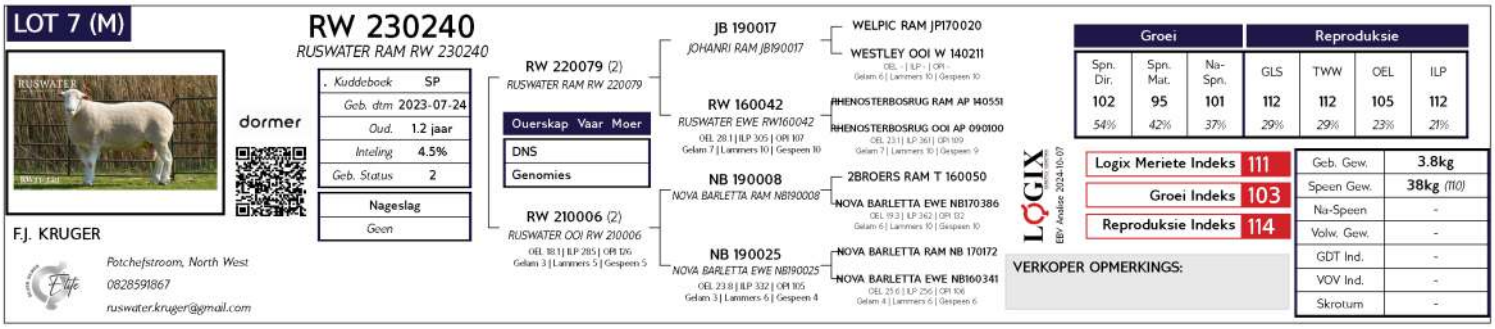

LOT NR 8				
Verkoper	**Beskrywing**	**Aantal**	**Koper**	**Prys**
JJ Nel & Seun	Dormer Ram SP	1		

***JN 230055**

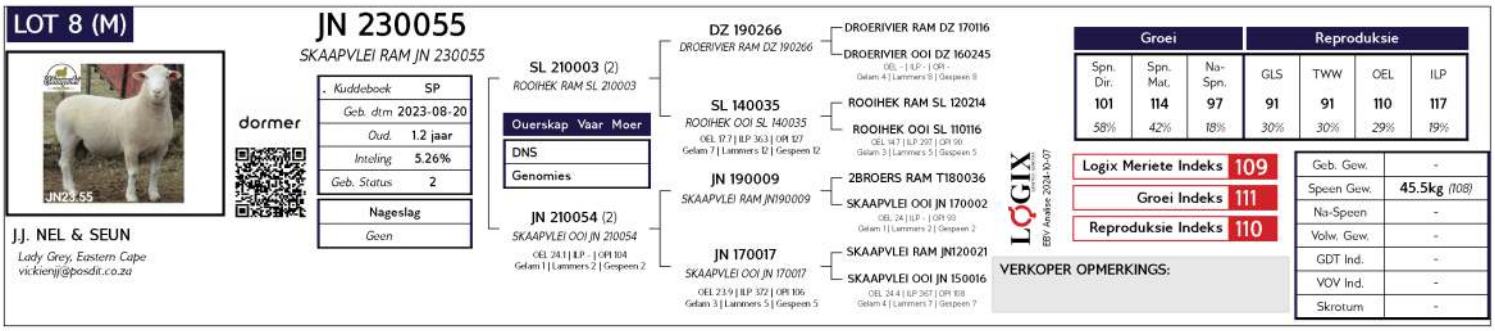

LOT NR 9				
Verkoper	**Beskrywing**	**Aantal**	**Koper**	**Prys**
JJ Nel & Seun	Dormer Ram SP	1		

***JN 230056**

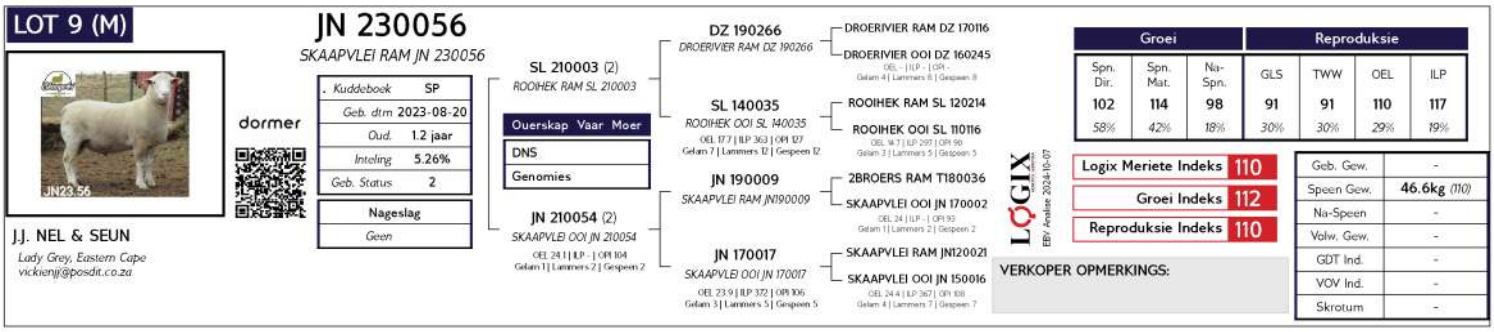

LOT NR 10				
Verkoper	**Beskrywing**	**Aantal**	**Koper**	**Prys**
JJ Nel & Seun	Dormer Ram SP	1		

***JN 230063**

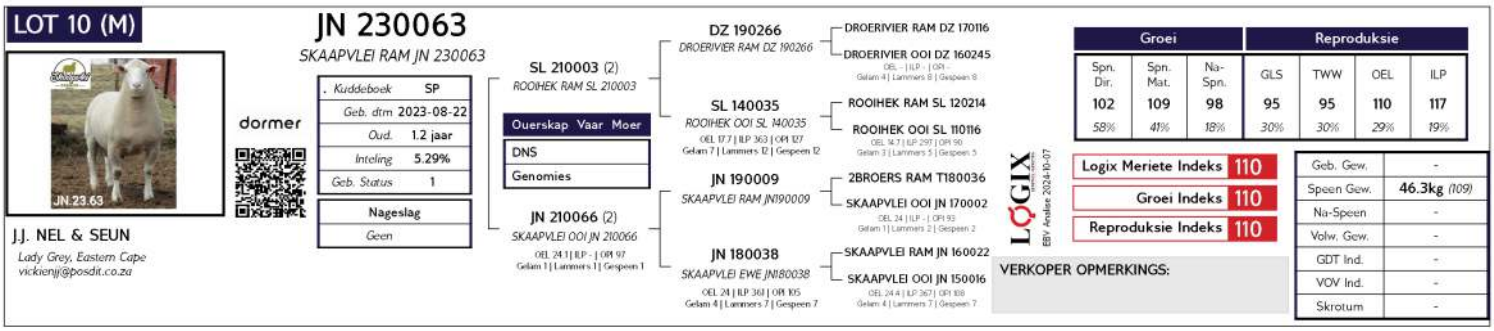

LOT NR 11				
Verkoper	**Beskrywing**	**Aantal**	**Koper**	**Prys**
JJ Nel & Seun	Dormer Ram SP	1		

***JN 230006**

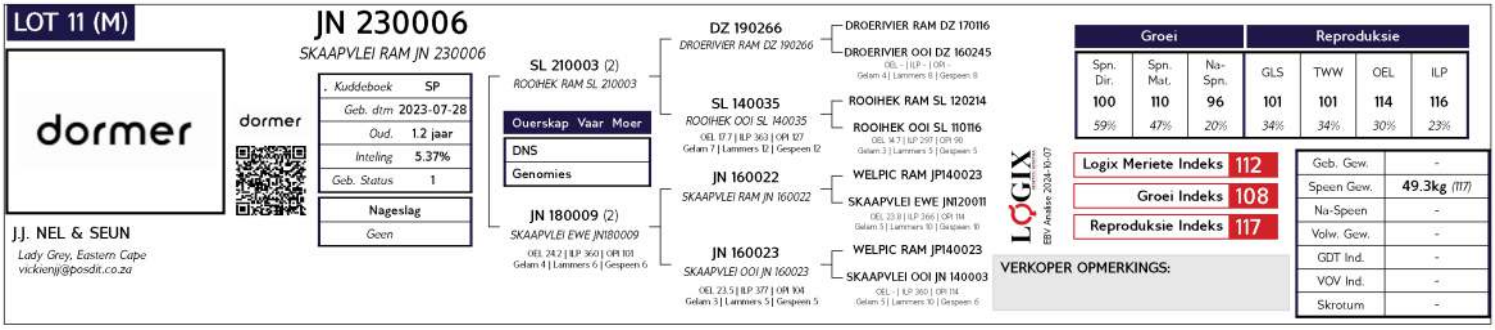

LOT NR 12				
Verkoper	**Beskrywing**	**Aantal**	**Koper**	**Prys**
Vredesig (Johnny Forbers)	Dormer Ram SP	1		

***VS 220082**

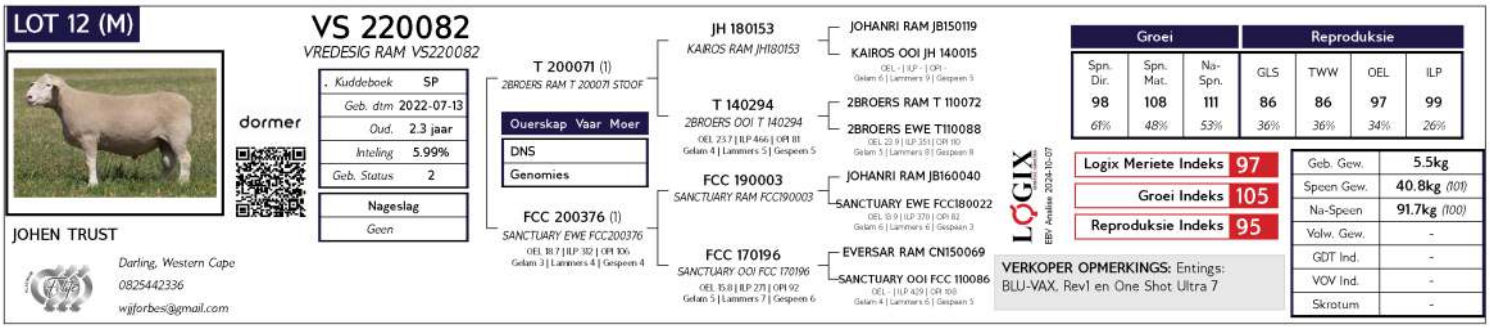

LOT NR 13				
Verkoper	**Beskrywing**	**Aantal**	**Koper**	**Prys**
Johen Trust	Dormer Ram SP	1		

***VS 220113**

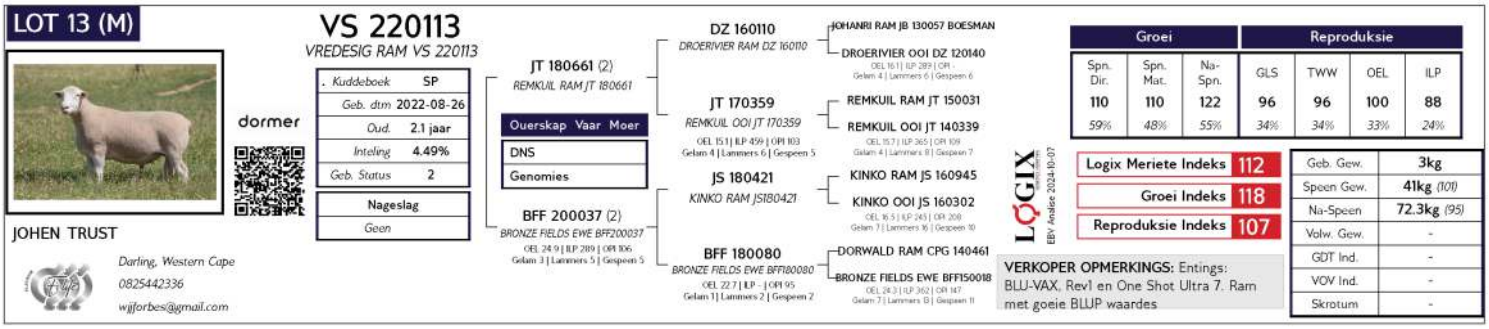

LOT NR 14				
Verkoper	**Beskrywing**	**Aantal**	**Koper**	**Prys**
Johen Trust	Dormer Ram SP	1		

***VS 220136**

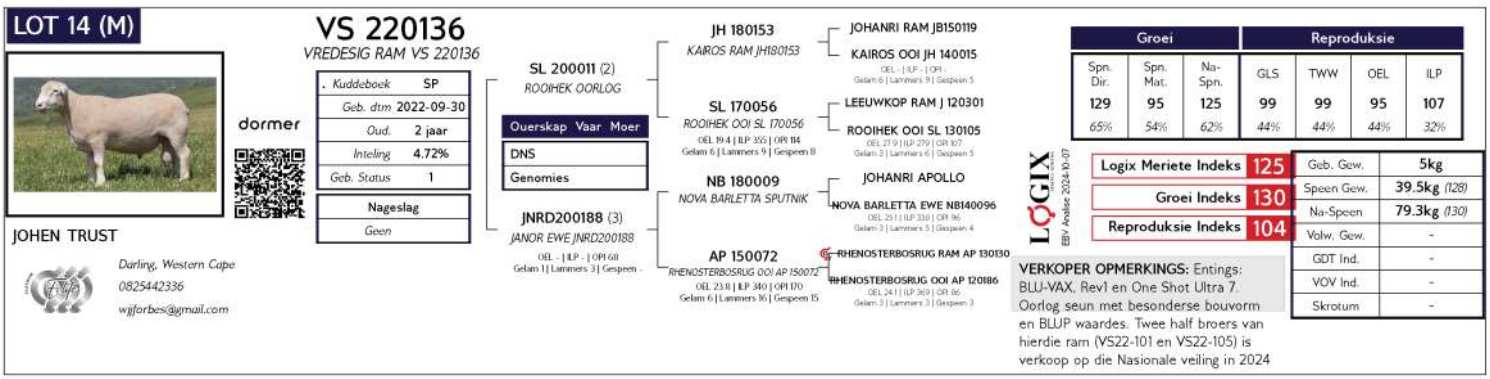

LOT NR 15				
Verkoper	**Beskrywing**	**Aantal**	**Koper**	**Prys**
Blikfontein Boerdery Trust	Dormer Ram SP	1		

***JP 220024**

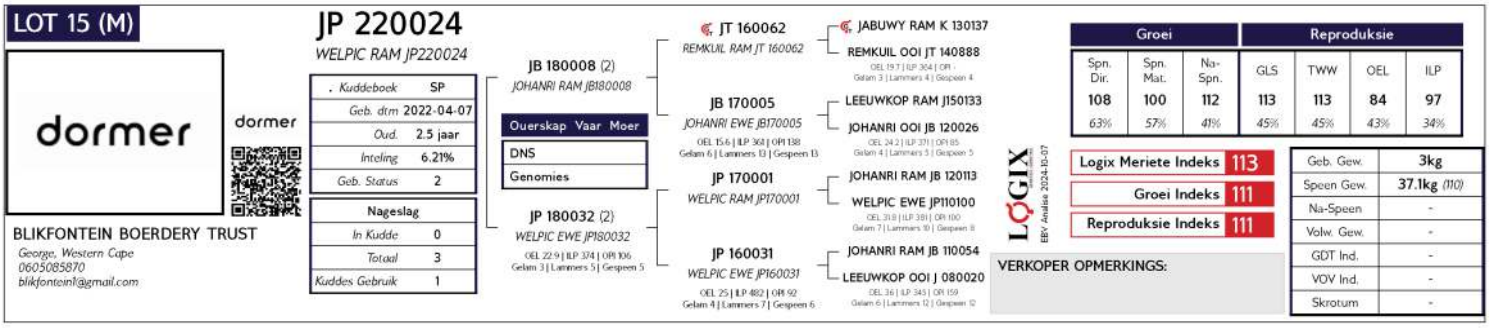

LOT NR 16				
Verkoper	**Beskrywing**	**Aantal**	**Koper**	**Prys**
Johen Trust	Dormer Ram SP	1		

***NB 220408**

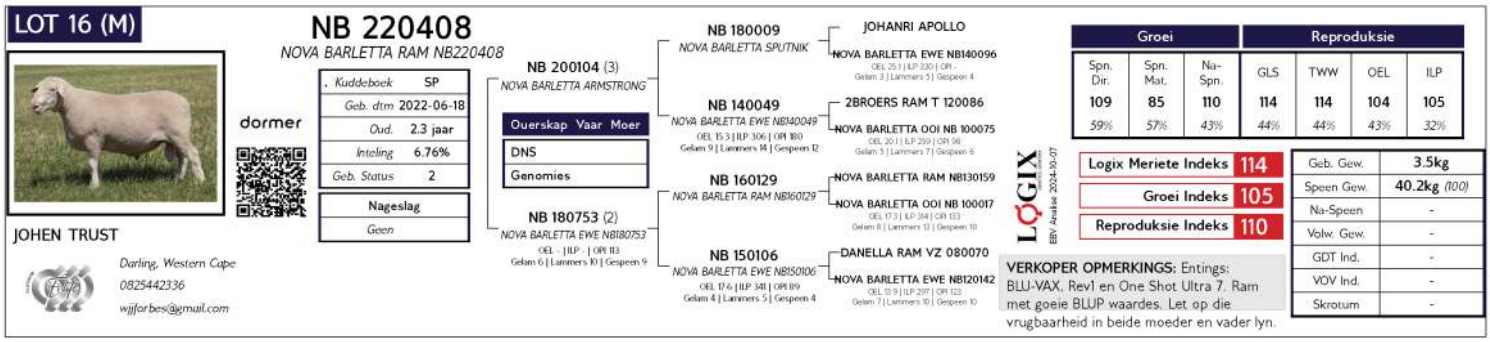

LOT NR 17				
Verkoper	**Beskrywing**	**Aantal**	**Koper**	**Prys**
Ducron Farms	Dormer Ram SP	1		

***AJC 230046**

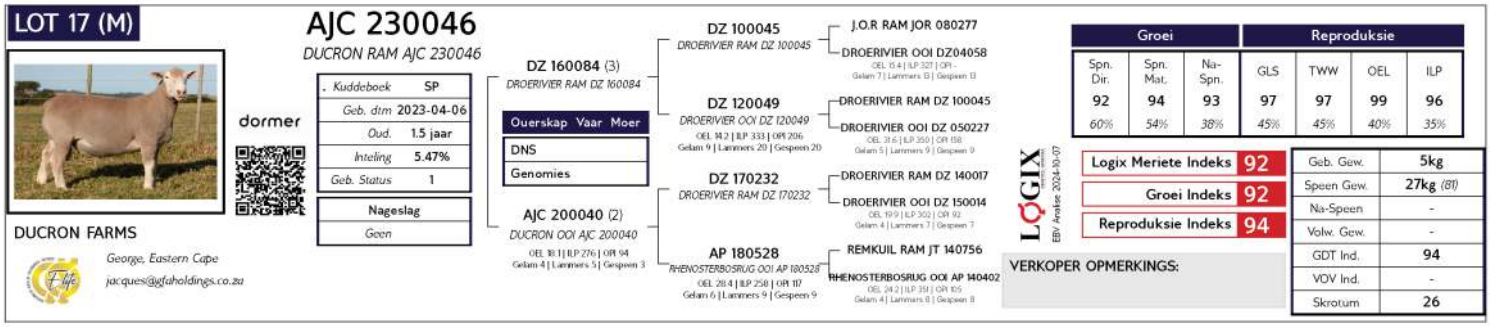

LOT NR 18				
Verkoper	**Beskrywing**	**Aantal**	**Koper**	**Prys**
Ducron Farms	Dormer Ram SP	1		

***AJC 230013**

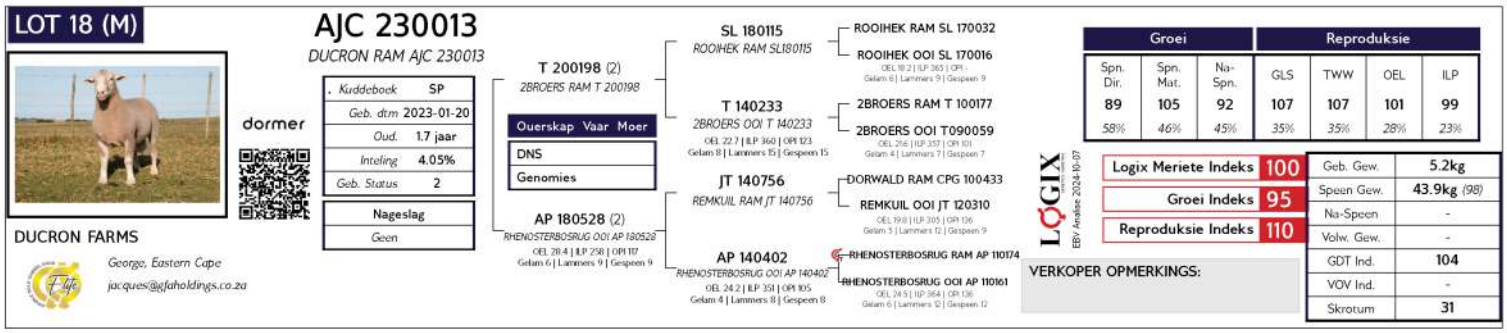

LOT NR 19A				
Verkoper	**Beskrywing**	**Aantal**	**Koper**	**Prys**
Ducron Farms	Dormer Ram SP	1		

***AJC 230071**

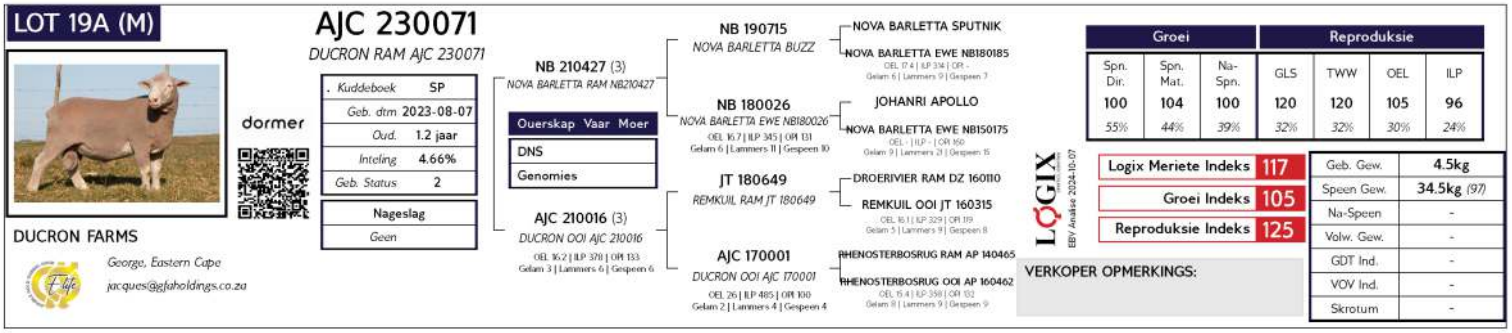

LOT NR 19B				
Verkoper	**Beskrywing**	**Aantal**	**Koper**	**Prys**
Ducron Farms	Dormer Ram SP	1		

AJC 23-0090

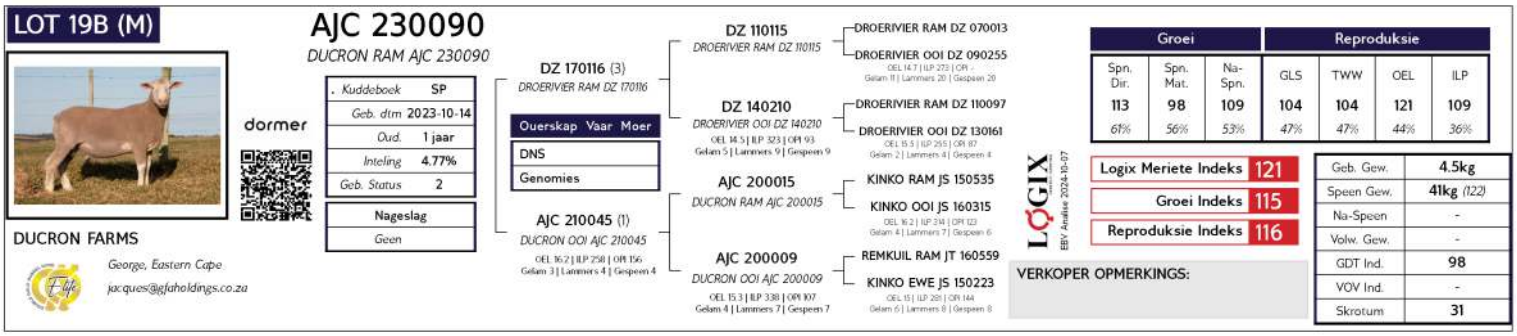

LOT NR 20				
Verkoper	**Beskrywing**	**Aantal**	**Koper**	**Prys**
Ruswater (FJ Kruger)	Dormer Ooi SP	1		

***RW 230285**

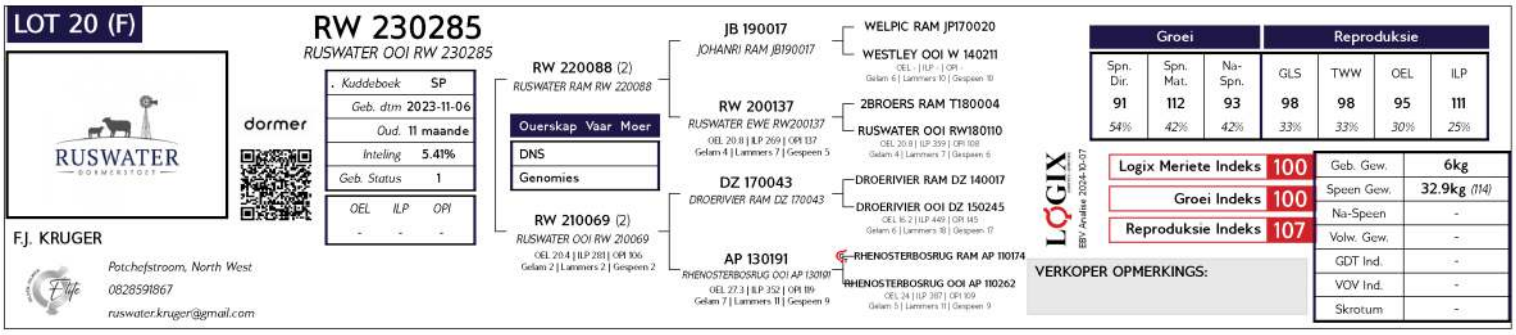

LOT NR 21				
Verkoper	**Beskrywing**	**Aantal**	**Koper**	**Prys**
Ruswater (FJ Kruger)	Dormer Ooi SP	1		

***RW 230287**

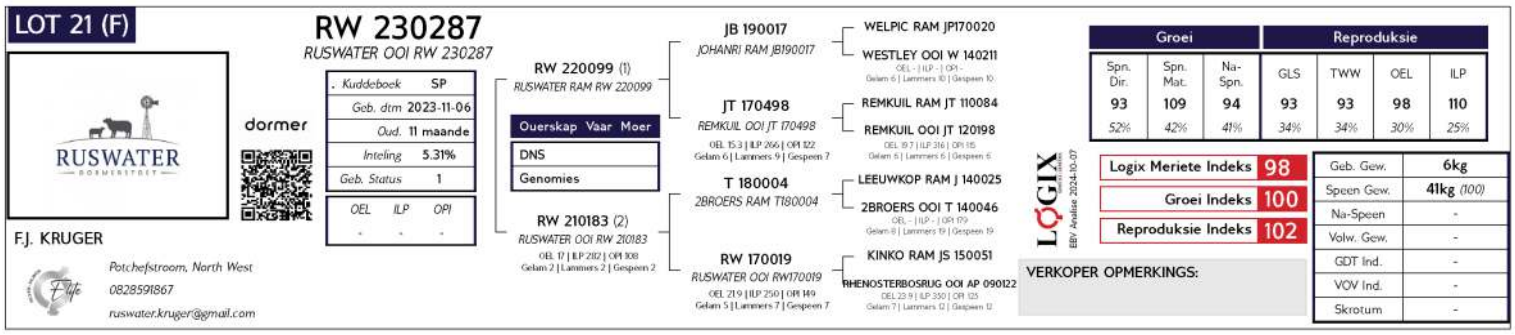

LOT NR 22				
Verkoper	**Beskrywing**	**Aantal**	**Koper**	**Prys**
LA ME Dormers	Dormer Ooi SP	1		

***RW 230273**

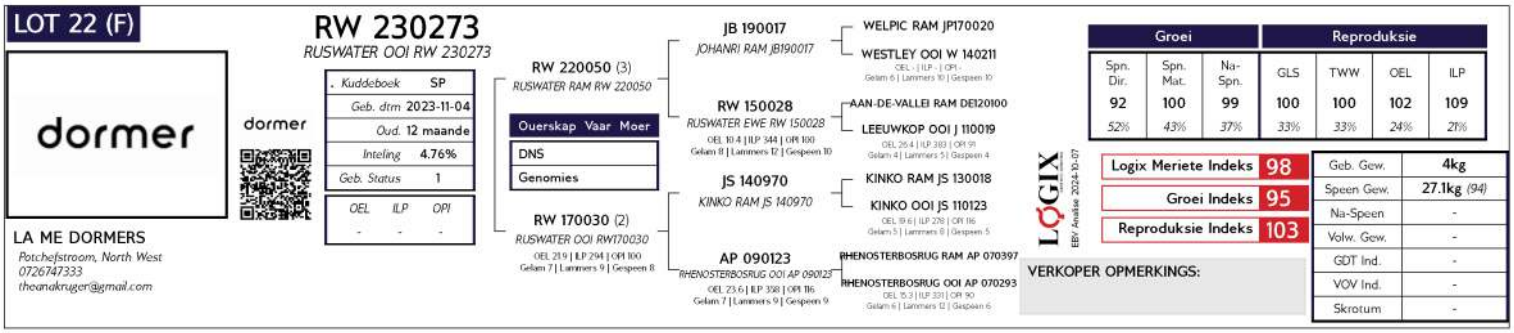

LOT NR 23				
Verkoper	**Beskrywing**	**Aantal**	**Koper**	**Prys**
JJ Nel & Seun	Dormer Ooi SP	1		

***JN 220011**

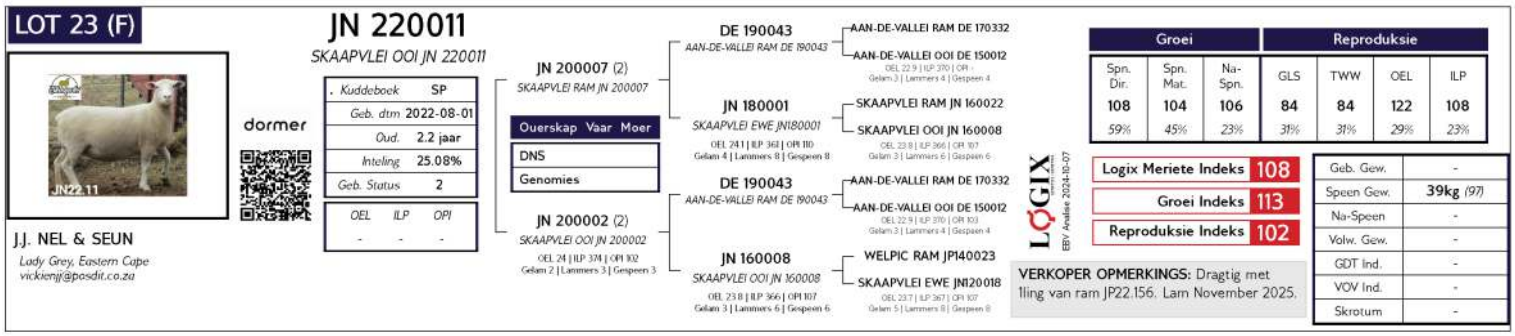

LOT NR 24				
Verkoper	**Beskrywing**	**Aantal**	**Koper**	**Prys**
JJ Nel & Seun	Dormer Ooi SP	1		

***JN 230004**

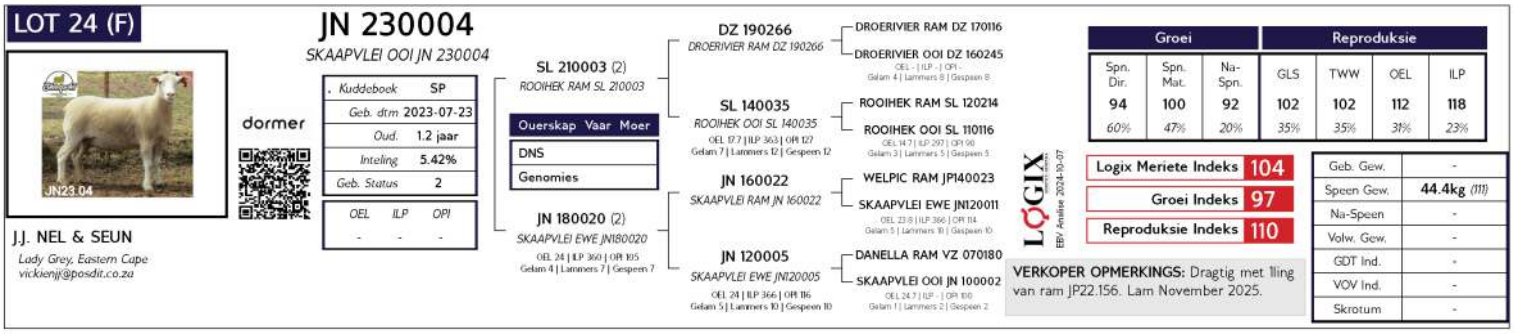

LOT NR 25				
Verkoper	**Beskrywing**	**Aantal**	**Koper**	**Prys**
JJ Nel & Seun	Dormer Ooi SP	1		

***JN 230008**

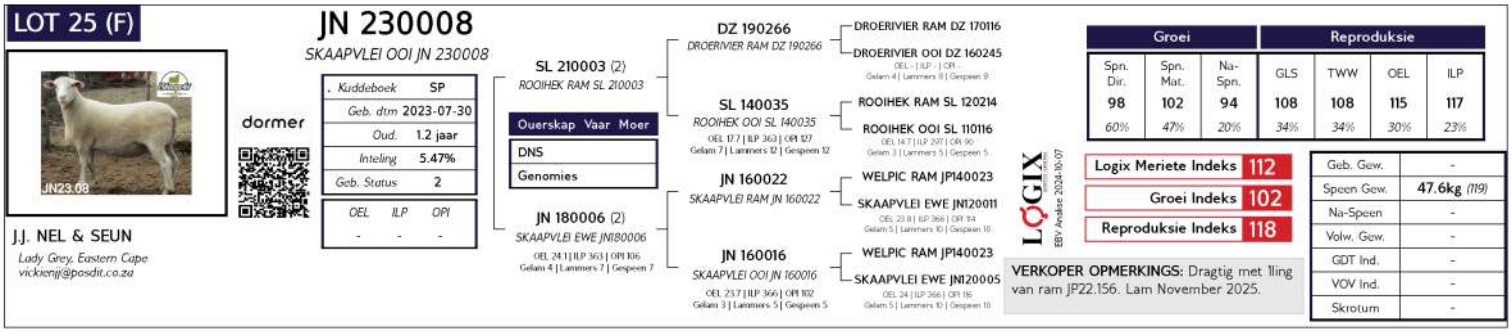

LOT NR 26				
Verkoper	**Beskrywing**	**Aantal**	**Koper**	**Prys**
Ducron Farms	Dormer Ooi SP	1		

***AJC 210028**

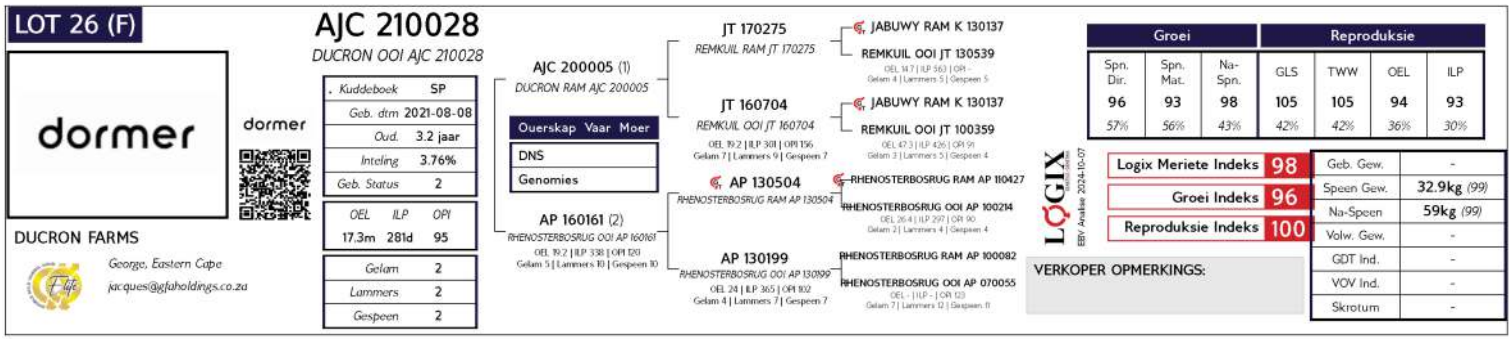

LOT NR 27				
Verkoper	**Beskrywing**	**Aantal**	**Koper**	**Prys**
Ducron Farms	Dormer Ooi SP	1		

***AJC 220013**

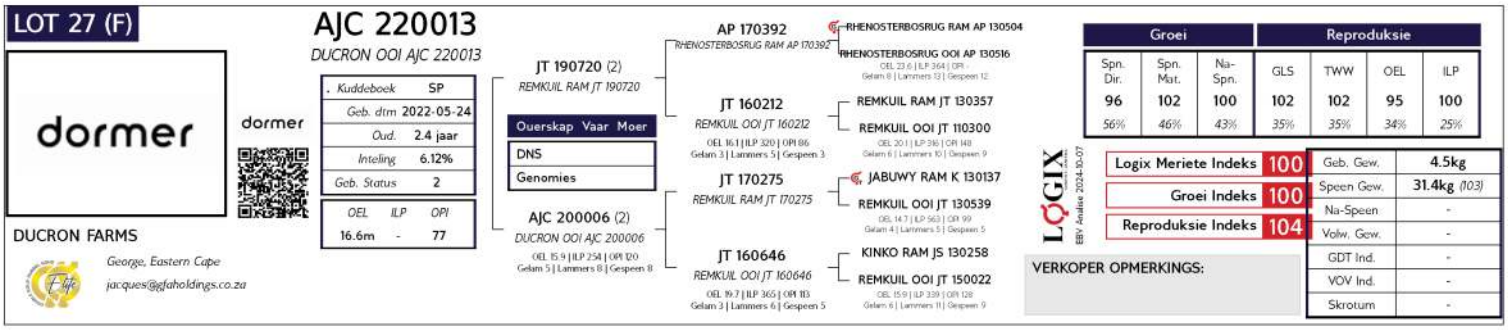

LOT NR 28				
Verkoper	**Beskrywing**	**Aantal**	**Koper**	**Prys**
Ducron Farms	Dormer Ooi SP	1		

***AJC 230003**

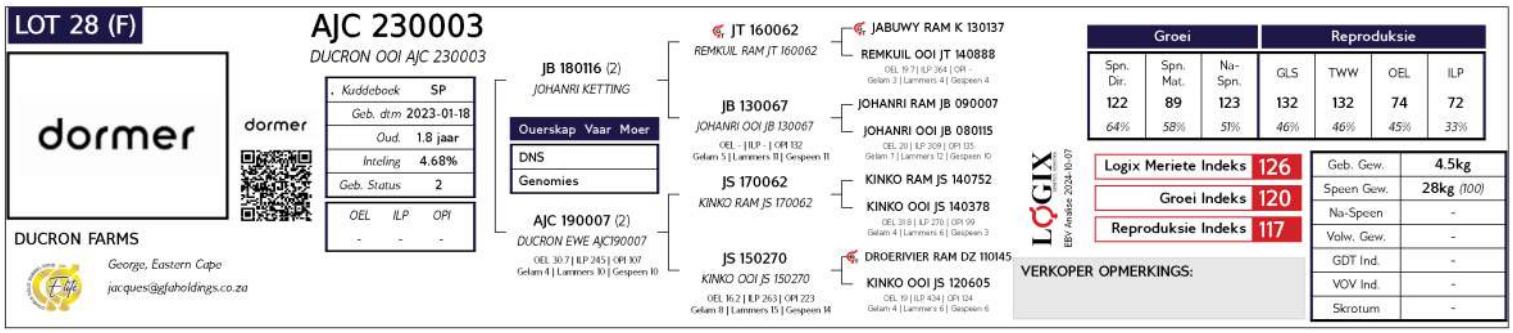

LOT NR 29				
Verkoper	**Beskrywing**	**Aantal**	**Koper**	**Prys**
Ducron Farms	Dormer Ooi SP	1		

***AJC 230058**

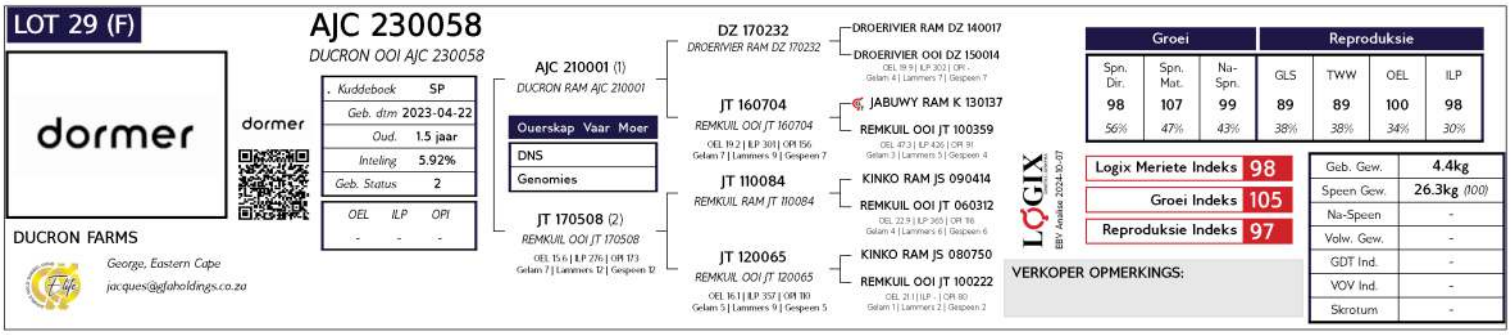

LOT NR 30				
Verkoper	**Beskrywing**	**Aantal**	**Koper**	**Prys**
Ducron Farms	Dormer Ooi SP	1		

***AJC 230066**

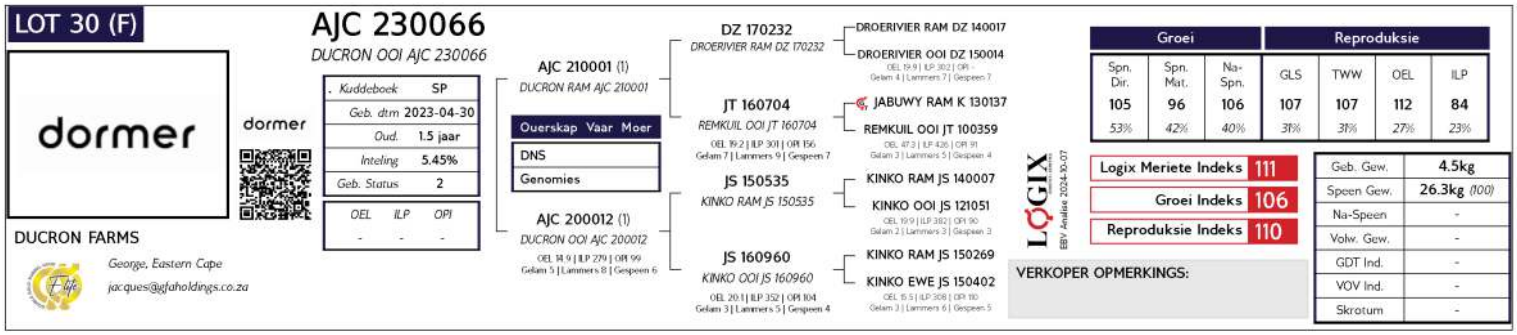

LOT NR 33				
Verkoper	**Beskrywing**	**Aantal**	**Koper**	**Prys**
JJ Nel & Seun	Dormer Ooi SP	1		

***JN 230060**

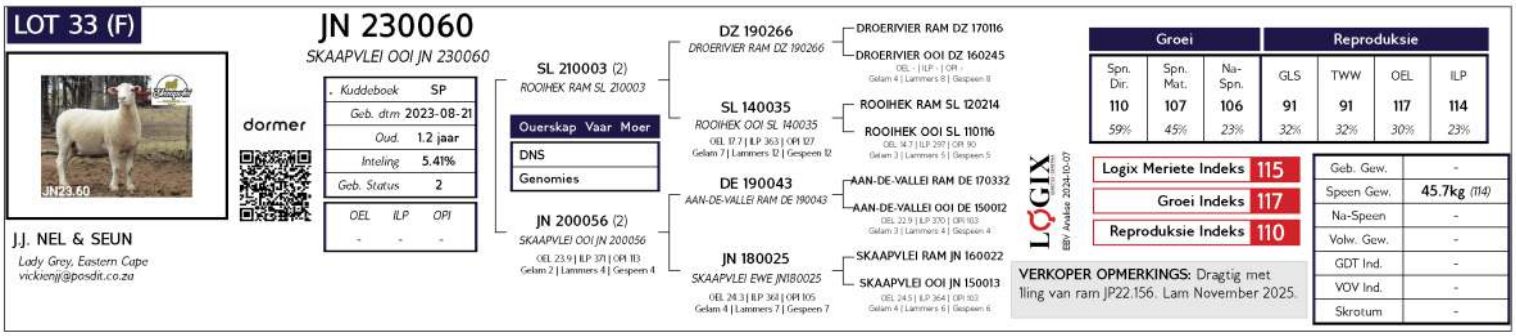

LOT NR 34				
Verkoper	**Beskrywing**	**Aantal**	**Koper**	**Prys**
JJ Nel & Seun	Dormer Ooi SP	1		

***JN 230002**

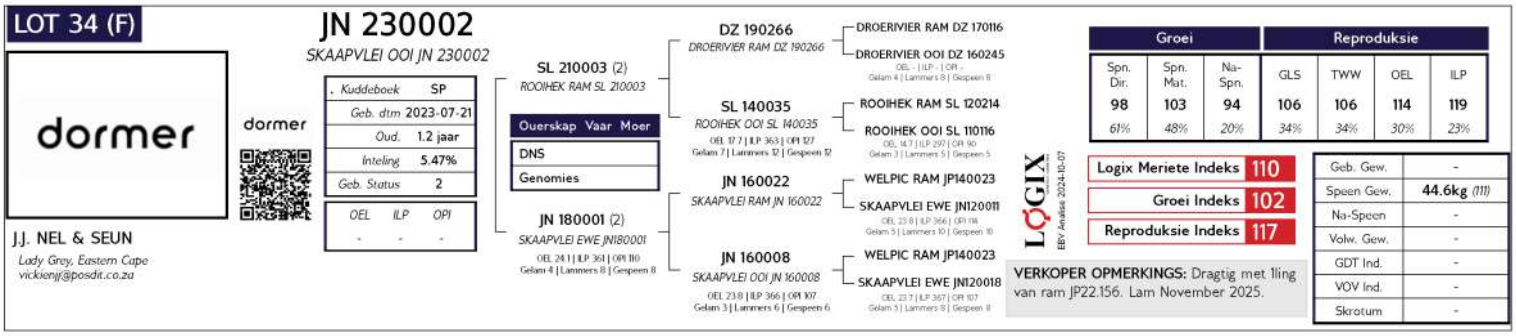

LOT NR 35				
Verkoper	**Beskrywing**	**Aantal**	**Koper**	**Prys**
JJ Nel & Seun	Dormer Ooi SP	1		

***JN 230076**

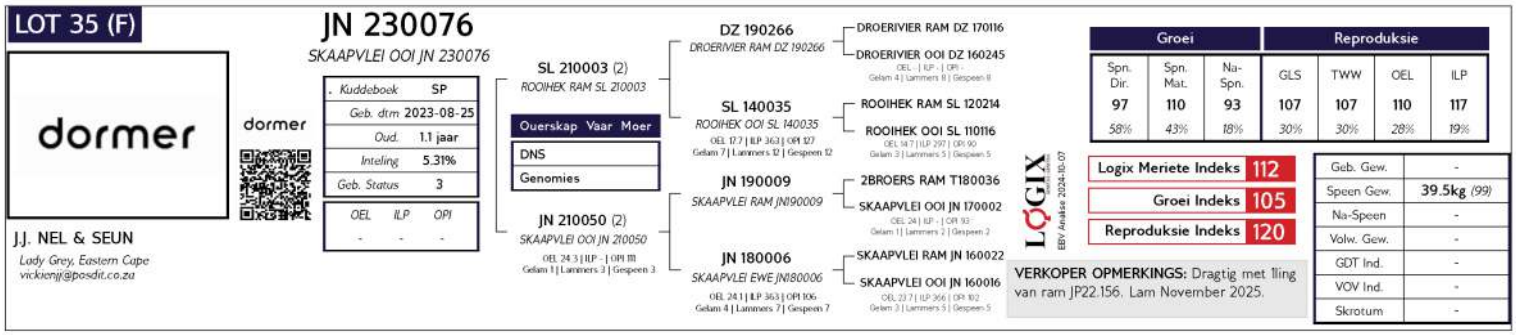

LOT NR 36				
Verkoper	**Beskrywing**	**Aantal**	**Koper**	**Prys**
Ducron Farms	Dormer Ooi SP	1		

***AJC 230092**

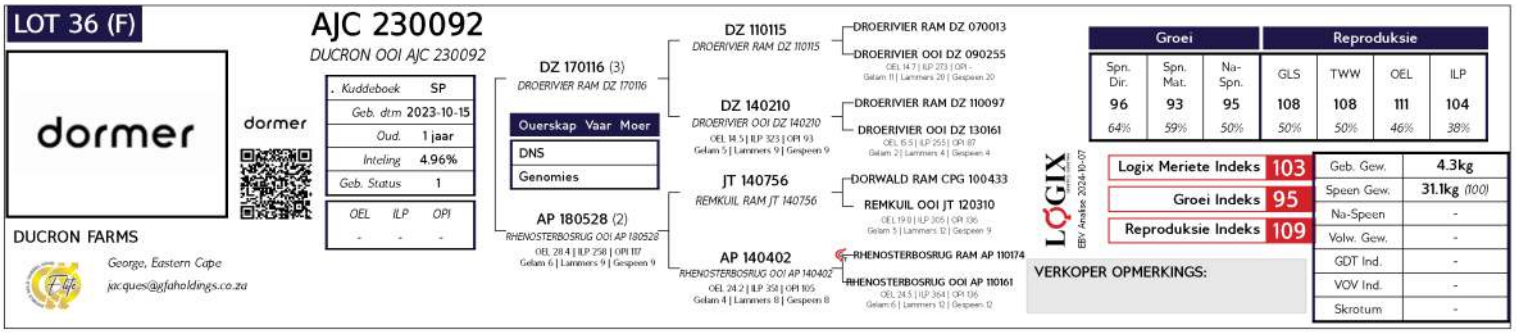

LOT NR 37				
Verkoper	**Beskrywing**	**Aantal**	**Koper**	**Prys**
Ducron Farms	Dormer Ooi SP	1		

***AJC 220015**

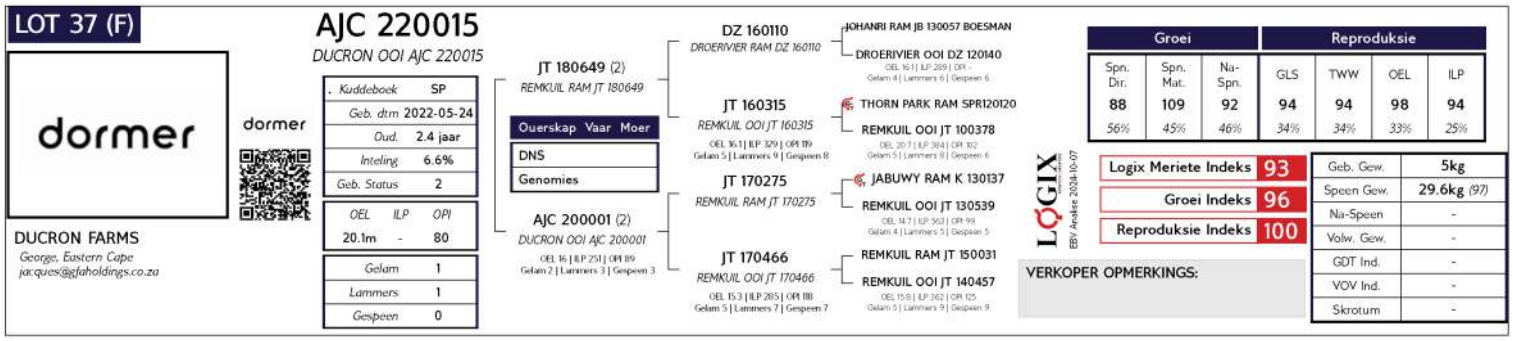

LOT NR 38				
Verkoper	**Beskrywing**	**Aantal**	**Koper**	**Prys**
Ducron Farms	Dormer Ooi SP	1		

***NB 200217**

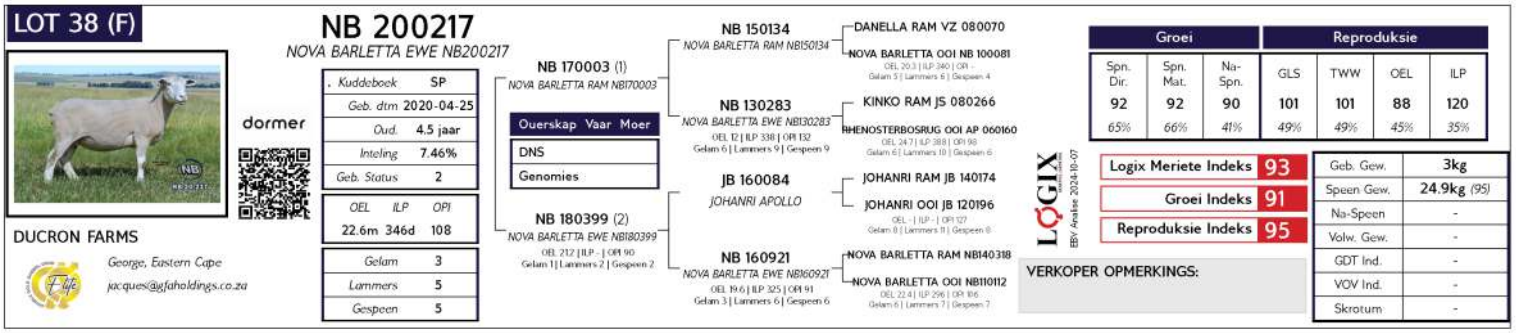

LOT NR 39				
Verkoper	**Beskrywing**	**Aantal**	**Koper**	**Prys**
Ducron Farms	Dormer Ooi SP	1		

***AJC 200019**

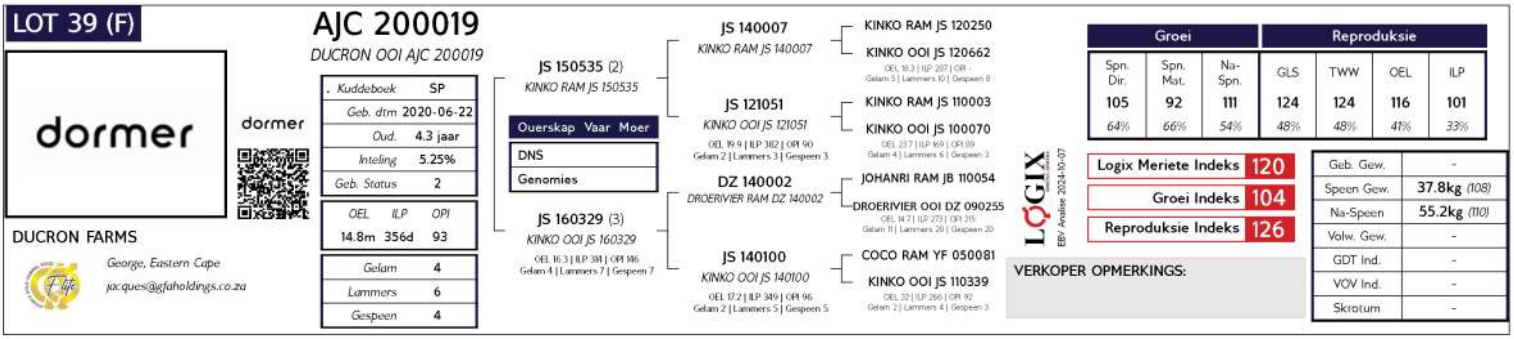

LOT NR 40				
Verkoper	**Beskrywing**	**Aantal**	**Koper**	**Prys**
Ducron Farms	Dormer Ooi SP	1		

***AJC 210011**

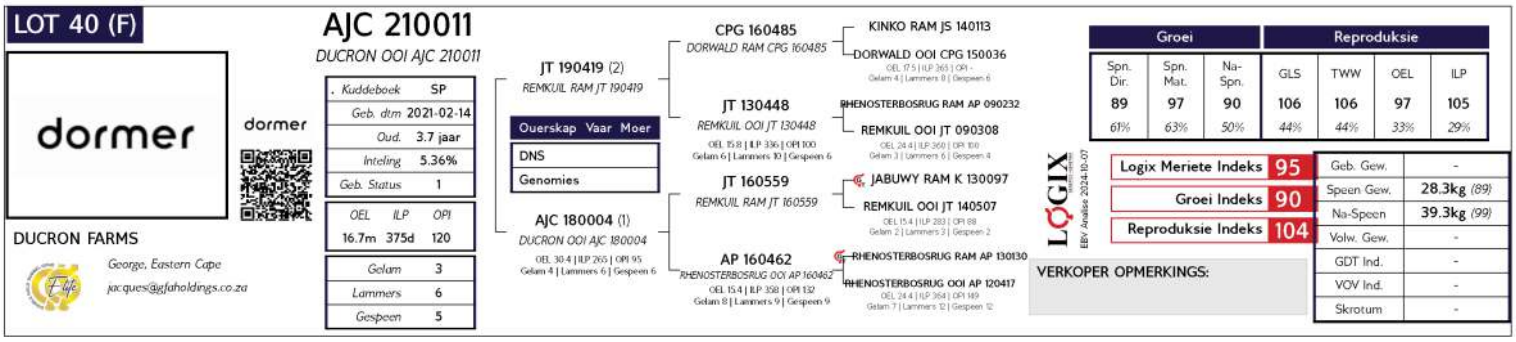

LOT NR 41				
Verkoper	**Beskrywing**	**Aantal**	**Koper**	**Prys**
Ducron Farms	Dormer Ooi SP	1		

***AJC 200012**

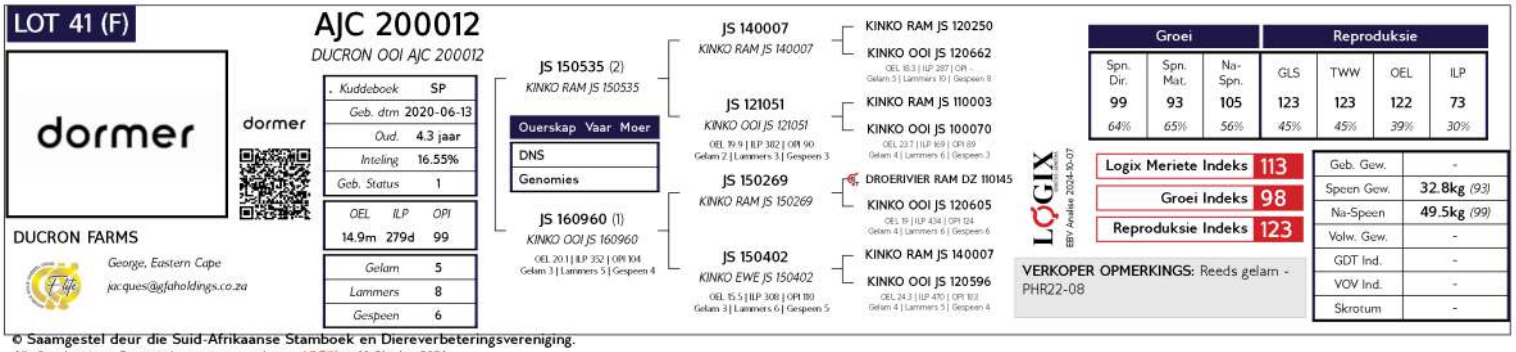

© Saamgestel deur die Suid-Afrikaanse Stamboek en Diereverbeteringsvereniging.
Alle Stamboom- en Prestasieduta soos aangeteken op LOGIX op 10 Oktober 2024

LOT NR 42				
Verkoper	**Beskrywing**	**Aantal**	**Koper**	**Prys**
Ducron Farms	Dormer Ooi SP	1		

***AJC 230002**

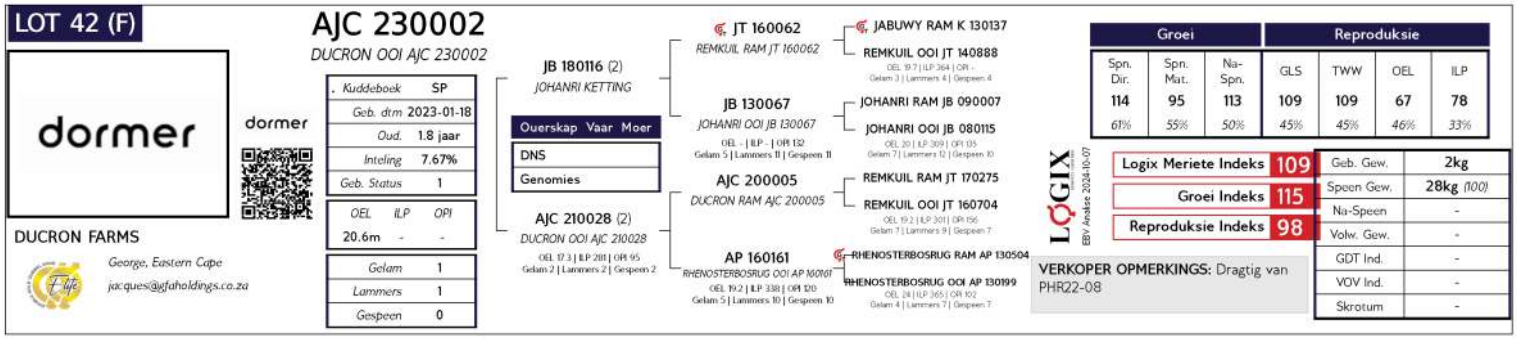

LOT NR 43				
Verkoper	**Beskrywing**	**Aantal**	**Koper**	**Prys**
Ducron Farms	Dormer Ooi SP	1		

***AJC 230026**

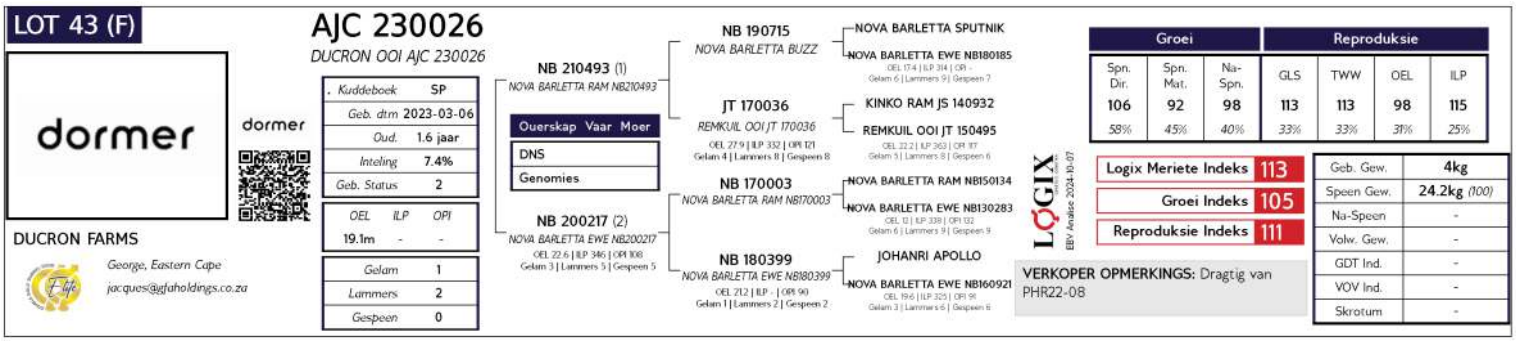

LOT NR 46				
Verkoper	**Beskrywing**	**Aantal**	**Koper**	**Prys**
Ducron Farms	Dormer Ooi SP	1		

***AJC 230038**

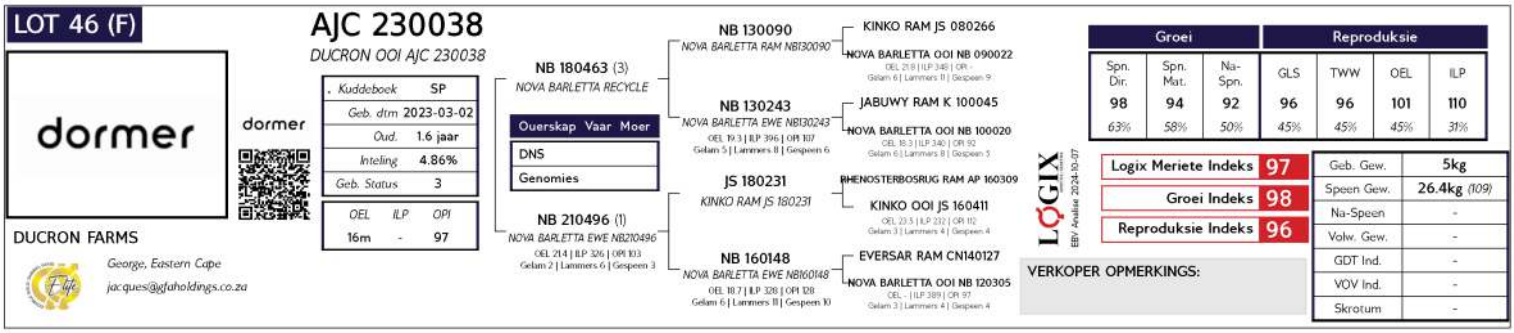

LOT NR 48				
Verkoper	**Beskrywing**	**Aantal**	**Koper**	**Prys**
Vredesig (Johnny Forbes)	Suffolk Ram SP	1		

***375 230189**

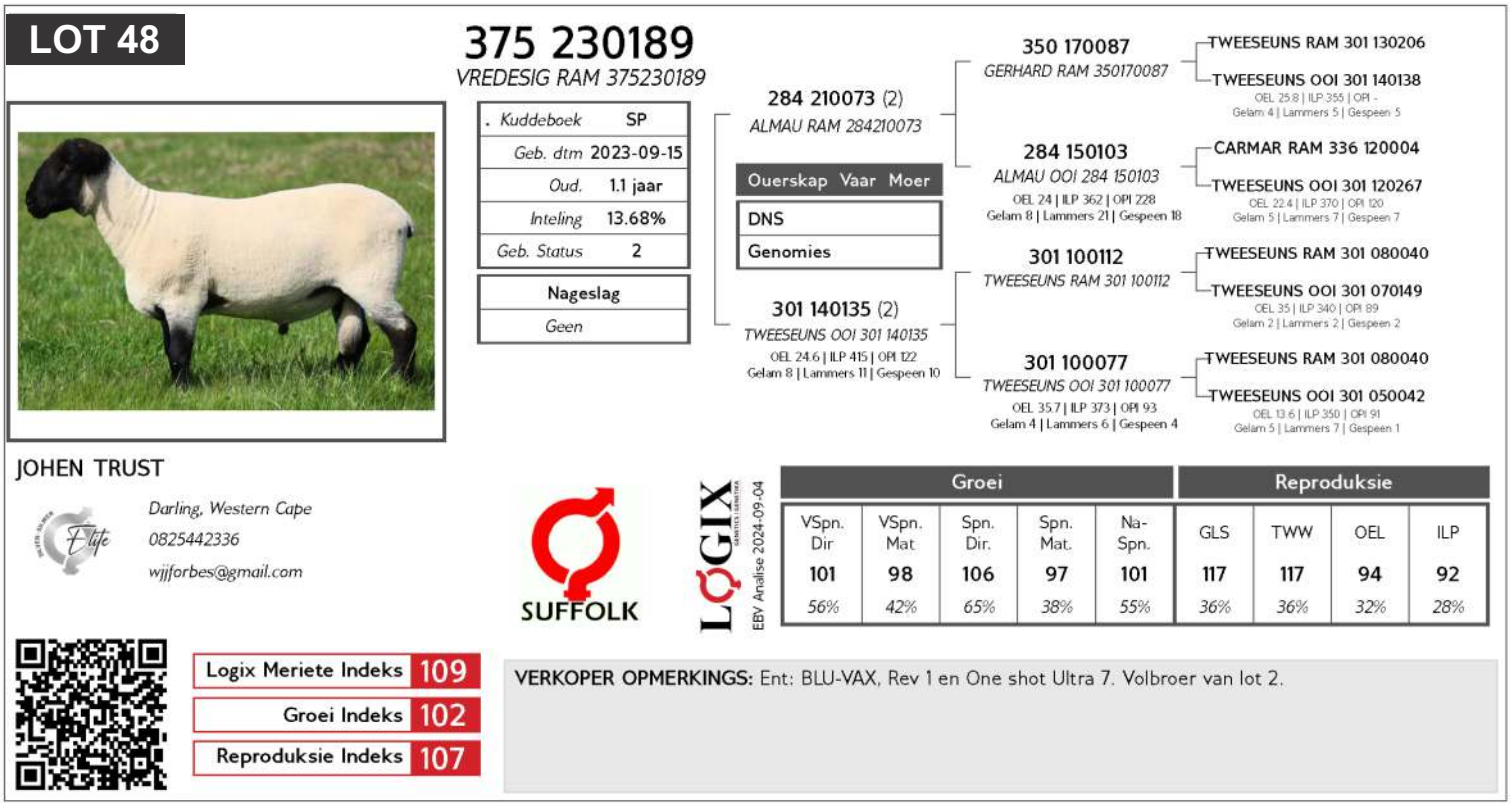

LOT NR 49				
Verkoper	**Beskrywing**	**Aantal**	**Koper**	**Prys**
Vredesig (Johnny Forbes)	Suffolk Ram SP	1		

***375 230 0190**

LOT 49

375 230190

VREDESIG RAM 375230190

Kuddeboek	SP
Geb. dtm	2023-09-15
Oud.	1.1 jaar
Inteling	13.68%
Geb. Status	2

Nageslag
Geen

284 210073 (2)
ALMAU RAM 284210073

Ouerskap	Vaar	Moer
DNS		
Genomies		

301 140135 (2)
TWEESEUNS OOI 301 140135
OEL 24.6 | ILP 415 | OPI 122
Gelam 8 | Lammers 11 | Gespeen 10

- **350 170087** *GERHARD RAM 350170087*
  - **TWEESEUNS RAM 301 130206**
  - **TWEESEUNS OOI 301 140138** OEL 25.8 | ILP 355 | OPI - Gelam 4 | Lammers 5 | Gespeen 5
- **284 150103** *ALMAU OOI 284 150103* OEL 24 | ILP 362 | OPI 228 Gelam 8 | Lammers 21 | Gespeen 18
  - **CARMAR RAM 336 120004**
  - **TWEESEUNS OOI 301 120267** OEL 22.4 | ILP 370 | OPI 120 Gelam 5 | Lammers 7 | Gespeen 7
- **301 100112** *TWEESEUNS RAM 301 100112*
  - **TWEESEUNS RAM 301 080040**
  - **TWEESEUNS OOI 301 070149** OEL 35 | ILP 340 | OPI 89 Gelam 2 | Lammers 2 | Gespeen 2
- **301 100077** *TWEESEUNS OOI 301 100077* OEL 35.7 | ILP 373 | OPI 93 Gelam 4 | Lammers 6 | Gespeen 4
  - **TWEESEUNS RAM 301 080040**
  - **TWEESEUNS OOI 301 050042** OEL 13.6 | ILP 350 | OPI 91 Gelam 5 | Lammers 7 | Gespeen 1

JOHEN TRUST

Elite

Darling, Western Cape
0825442336
wjjforbes@gmail.com

SUFFOLK

LOGIX — EBV Analise 2024-09-04

Groei					Reproduksie			
VSpn. Dir	VSpn. Mat	Spn. Dir.	Spn. Mat.	Na-Spn.	GLS	TWW	OEL	ILP
107	97	113	97	108	117	117	94	92
56%	42%	65%	38%	55%	36%	36%	32%	28%

Logix Meriete Indeks	115
Groei Indeks	108
Reproduksie Indeks	110

VERKOPER OPMERKINGS: Ent: BLU-VAX, Rev 1 en One shot Ultra 7. Volbroer van lot 1. Ram met goeie BLUP waardes.

LOT NR 50				
Verkoper	**Beskrywing**	**Aantal**	**Koper**	**Prys**
Vredesig (Johnny Forbes)	Suffolk Ram SP	1		

***375 230217**

LOT 50

375 230217

VREDESIG RAM 375230217

Kuddeboek	SP
Geb. dtm	2023-10-02
Oud.	1.1 jaar
Inteling	9.12%
Geb. Status	2

Nageslag
Geen

284 210002 (2)
ALMAU RAM 284 210002

Ouerskap	Vaar	Moer
DNS		
Genomies		

301 170013 (2)
TWEESEUNS EWE 301170013
OEL 24 | ILP 459 | OPI 95
Gelam 5 | Lammers 8 | Gespeen 5

- **284 190026** *ALMAU RAM 284190026*
  - **ALMAU RAM 284180007**
  - **ALMAU OOI 284 150103** OEL 24 | ILP 362 | OPI - Gelam 8 | Lammers 21 | Gespeen 18
- **284 190023** *ALMAU OOI 284190023* OEL 23.7 | ILP 373 | OPI 128 Gelam 4 | Lammers 8 | Gespeen 6
  - **GERHARD RAM 350170087**
  - **ALMAU OOI 284 130058** OEL 22.8 | ILP 362 | OPI 142 Gelam 5 | Lammers 10 | Gespeen 9
- **301 140197** *TWEESEUNS RAM 301 140197*
  - **TWEESEUNS RAM 301 100112**
  - **TWEESEUNS OOI 301 090156** OEL 35.9 | ILP 371 | OPI 107 Gelam 3 | Lammers 5 | Gespeen 4
- **301 120086** *TWEESEUNS OOI 301 120086* OEL 37.5 | ILP 529 | OPI 98 Gelam 3 | Lammers 5 | Gespeen 5
  - **TWEESEUNS RAM 301 080012**
  - **TWEESEUNS OOI 301 080017** OEL 14.3 | ILP 341 | OPI 108 Gelam 4 | Lammers 5 | Gespeen 3

JOHEN TRUST

Elite

Darling, Western Cape
0825442336
wjjforbes@gmail.com

SUFFOLK

LOGIX — EBV Analise 2024-09-04

Groei					Reproduksie			
VSpn. Dir	VSpn. Mat	Spn. Dir.	Spn. Mat.	Na-Spn.	GLS	TWW	OEL	ILP
90	101	93	100	95	109	109	84	88
52%	38%	53%	34%	38%	32%	32%	28%	24%

Logix Meriete Indeks	93
Groei Indeks	92
Reproduksie Indeks	96

VERKOPER OPMERKINGS: Ent: BLU-VAX, Rev 1 en One shot Ultra 7.

LOT NR 51				
Verkoper	**Beskrywing**	**Aantal**	**Koper**	**Prys**
Marhet Dormers	Dormer Ram Kommersieël	1		

***220022**

LOT NR 52				
Verkoper	**Beskrywing**	**Aantal**	**Koper**	**Prys**
Marhet Dormers	Dormer Ram Kommersieël	1		

***230040**

LOT NR 53				
Verkoper	**Beskrywing**	**Aantal**	**Koper**	**Prys**
Ducron Farms	Dormer Ram Kommersieël	1		

***AJC230069**

LOT NR 54				
Verkoper	**Beskrywing**	**Aantal**	**Koper**	**Prys**
Ducron Farms	Dormer Ram Kommersieël	1		

***AJC230091**

LOT NR 55				
Verkoper	**Beskrywing**	**Aantal**	**Koper**	**Prys**
Muldersbank Meatmaster	Meatmaster Ram (4T) Kommersieël	1		

***22-121**

***Dosserings: Multivax P & Prodose Orange**

LOT NR 56				
Verkoper	**Beskrywing**	**Aantal**	**Koper**	**Prys**
Muldersbank Meatmaster	Meatmaster Ram (4T) Kommersieël	1		

***22-88**

***Dosserings: Multivax P & Prodose Orange**

LOT NR 57				
Verkoper	**Beskrywing**	**Aantal**	**Koper**	**Prys**
Muldersbank Meatmaster	Meatmaster Ram (2T) Kommersieël	1		

***23-018**

***Dosserings: Multivax P & Prodose Orange**

LOT NR 58				
Verkoper	**Beskrywing**	**Aantal**	**Koper**	**Prys**
Muldersbank Meatmaster	Meatmaster Ram (2T) Kommersieël	1		

***23-016**

***Dosserings: Multivax P & Prodose Orange**

LOT NR 59				
Verkoper	**Beskrywing**	**Aantal**	**Koper**	**Prys**
Muldersbank Meatmaster	Meatmaster Ram (2T) Kommersieël	1		

***23-023**

***Dosserings: Multivax P & Prodose Orange**

LOT NR 60				
Verkoper	**Beskrywing**	**Aantal**	**Koper**	**Prys**
Ducron Farms	Dormer Ooi Kommersieël	1		

***AJC230084**

LOT NR 61				
Verkoper	**Beskrywing**	**Aantal**	**Koper**	**Prys**
Ducron Farms	Dormer Ooi Kommersieël	1		

***AJC230086**

LOT NR 62				
Verkoper	**Beskrywing**	**Aantal**	**Koper**	**Prys**
Ducron Farms	Dormer Ooi Kommersieël	1		

***AJC230094**

LOT NR 63				
Verkoper	**Beskrywing**	**Aantal**	**Koper**	**Prys**
Andre Viljoen	Dormer Ooi Kommersieël	5		

LOT NR 64				
Verkoper	**Beskrywing**	**Aantal**	**Koper**	**Prys**
Andre Viljoen	Dormer Ooi Kommersieël	5		

LOT NR 65				
Verkoper	**Beskrywing**	**Aantal**	**Koper**	**Prys**
Andre Viljoen	Dormer Ooi Kommersieël	5		

LOT NR 66				
Verkoper	**Beskrywing**	**Aantal**	**Koper**	**Prys**
Andre Viljoen	Dormer Ooi Kommersieël	5		

LOT NR 67				
Verkoper	**Beskrywing**	**Aantal**	**Koper**	**Prys**
Andre Viljoen	Dormer Ooi Kommersieël	5		

LOT NR 68				
Verkoper	**Beskrywing**	**Aantal**	**Koper**	**Prys**
Andre Viljoen	Dormer Ooi Kommersieël	5		

Bees / Cattle

LOT NR 1				
Verkoper	**Beskrywing**	**Aantal**	**Koper**	**Prys**
Spoor Angus / A. Moolman	Swart Angus Bul SP	1		

***LVR 22 0016**

***Reserwe Kampioen Swart Angus Bul Moorreesburg 2024, seker een van die beste bulle wat ek nog geteel het**

***Lengte en bespiering van die bul glo ek is 'n voorbeeld vir die ras**

CLASS / KLAS 18.: Bul, 21 tot 24 maande / Bull, 21 to 24 months

3 SPOOR LVR 220016 MNR. L. VAN ROOYEN AANMLVR 220016 0095826491 09/10/2022

Vaar / Sire SOO LINE LOCOMOTIVE 1403

Moer / Dam SPOOR LADY MINO 1

	Geb. / Birth		Speen / Wean		12M	18M	GDE	V/D	SD	F/P
Indekse / Indices										
T. waardes / B. values	101	88	108	117	117	113	111	112	96	116

DRAFT

SA STAMBOEK STUD BOOK

Extended Pedigree Certificate

compiled by S.A. Stud Book and Animal Improvement Association

ANGUS

BREED: ANGUS S.A.

NAME: SPOOR LVR 220016 **D.O.B.** 2022/10/09 **STATUS:** REG

REGNO: 0095826491 **SEX:** MALE **HERDBOOK SECTION:** PEN

IDNO: AANMLVR 220016 **LABNO:** U17098U007

OWNER: MNR. L. VAN ROOYEN **ADDRESS:** MNR. L. VAN ROOYEN, POSBUS 7343, BLANCO, 6531

BREEDER: MNR. L. VAN ROOYEN **ADDRESS:** MNR. L. VAN ROOYEN, POSBUS 7343, BLANCO, GEORGE, 6531

NAME: SPOOR LVR 220016
REGNO: 0095826491
IDNO. AANMLVR 220016
D.O.B. 2022/10/09
SECTION : PEN / PRF
LABNO : U17098U007 **INB :** 1%
HORNPOLL :

- **S** SOO LINE LOCOMOTIVE 1403 — IDNo.: SOO403Y; Regno.: 0084052398; Section: SP / 56; Labno.: U316133; INB: 0%; Hornpoll:
  - **SS** SOO LINE MOTIVE 9016 — IDNo.: 9016; Regno.: 0084051952; Section: - / -; Labno.: -; INB: 0%; Hornpoll:
    - **SSS** HF KODIAK 5R — IDNo.: 5R; Regno.: 0073756041; Section: SP / SP; Labno.: U163304; INB: 0%; Hornpoll:
      - **SSSS** SANDY BAR ADVANTAGE 43M — IDNo.: 43M; Regno.: 0073756033; Hornpoll; INB: 0%
      - **SSSD** WILBAR RUBY 955N — IDNo.: 955N; Regno.: 0073756009; Hornpoll; INB: 0%
    - **SSD** TLA BEAUTY 5R — IDNo.: 5R; Regno.: 0084051945; Section: - / -; Labno.: -; INB: 0%; Hornpoll:
      - **SSDS** RR 7407 RAINMAKER 2154 — IDNo.: 2154; Regno.: 0084051937; Hornpoll; INB: 0%
      - **SSDD** TERRLENE BEAUTY 35F — IDNo.: 35F; Regno.: 0084051929; Hornpoll; INB: 0%
  - **SD** SHADY BROOK EVERENTENSE 2 — IDNo.: 2039; Regno.: 0084052117; Section: - / -; Labno.: -; INB: 0%; Hornpoll:
    - **SDS** S A V FINAL ANSWER 0035 — IDNo.: 0035; Regno.: 0065000523; Section: SP / 56; Labno.: C16-12687; INB: 0%; Hornpoll:
      - **SDSS** SITZ TRAVELER 8180 — IDNo.: 10D; Regno.: 0049335417; Hornpoll; INB: 1%
      - **SDSD** S A V EMULOUS 8145 — IDNo.: 8145; Regno.: 0065000531; Hornpoll; INB: 0%
    - **SDD** SCR EVERELDA ENTENSE 748 — IDNo.: 748SCR; Regno.: 0084052109; Section: - / -; Labno.: -; INB: 0%; Hornpoll:
      - **SDDS** N BAR EMULATION EXT 849773 — IDNo.: EXT849773; Regno.: 0084052091; Hornpoll; INB: 0%
      - **SDDD** BT EVERELDA ENTENSE 579L — IDNo.: 579L; Regno.: 0084052083; Hornpoll; INB: 0%
- **D** SPOOR LADY MINO 1 — IDNo.: AANFLVR 180037; Regno.: 0088811609; Section: SP / 56; Labno.: -; INB: 3%; Hornpoll:
  - **DS** DE-PANNE INTERNATIONAL NO. — IDNo.: AANMDE 150013; Regno.: 0083382036; Section: SP / 56; Labno.: U308804; INB: 2%; Hornpoll:
    - **DSS** S A V INTERNATIONAL 2020 — IDNo.: 2020; Regno.: 0079851747; Section: SP / 56; Labno.: U329978; INB: 7%; Hornpoll:
      - **DSSS** S A V HARVESTOR 0338 — IDNo.: 0338; Regno.: 0075795088; Hornpoll; INB: 5%
      - **DSSD** S A V EMBLYNETTE 5483 — IDNo.: 5483; Regno.: 0079851739; Hornpoll; INB: 2%
    - **DSD** DE-PANNE HOT 023000 1STE — IDNo.: AANFDE 060061; Regno.: 0063570154; Section: SP / 56; Labno.: U244612; INB: 4%; Hornpoll:
      - **DSDS** VERMILLION DATELINE 7078 — IDNo.: 7078; Regno.: 0047527577; Hornpoll; INB: 0%
      - **DSDD** HOT 02 3000 — IDNo.: AANFHAR 020006; Regno.: 0045724226; Hornpoll; INB: 0%
  - **DD** GROOT VYF MINO 1 — IDNo.: AANFGV 110002; Regno.: 0075041442; Section: SP / 56; Labno.: U432515; INB: 1%; Hornpoll:
    - **DDS** MEQUATLING FORT KNOX — IDNo.: AANMWB 070168; Regno.: 0065069718; Section: SP / 56; Labno.: X0000031098; INB: 1%; Hornpoll:
      - **DDSS** S A V NET WORTH 4200 — IDNo.: 4200; Regno.: 0063171318; Hornpoll; INB: 1%
      - **DDSD** MEQUATLING LASSIE 1301 — IDNo.: AANFWB 010301; Regno.: 0043892397; Hornpoll; INB: 0%
    - **DDD** FLIPSTA AGENT MINO — IDNo.: AANFPJD 040010; Regno.: 0049748122; Section: SP / 56; Labno.: X0000907966; INB: 1%; Hornpoll:
      - **DDDS** GEBA DOLFINMOORE AGENT — IDNo.: AANMGB 000546; Regno.: 0044418127; Hornpoll; INB: 0%
      - **DDDD** TAAIVELD MINODUN — IDNo.: AANFK 990097; Regno.: 0041703760; Hornpoll; INB: 7%

Report version 1.003 Generated by logix

LOT NR 2				
Verkoper	**Beskrywing**	**Aantal**	**Koper**	**Prys**
Spoor Angus / A. Moolman	Rooi Angus Bul SP	1		

***LVR 22 0014**

*** Mediumraam bul met 'n uitsonderlike agterkwart.**

***Rooi Angus junior en groot kampioen bul asook interras junior kampioen bul op die streekkampioenskappe te Moorreesburg**

***Ook ''runner-up" vir die goue beker 2024 te Morreesburg**

CLASS / KLAS 18.: Bul, 21 tot 24 maande / Bull, 21 to 24 months

1	SPOOR LVR 220014			MNR. L. VAN ROOYEN								AANMLVR 220014	00966'
												Vaar / Sire SPOOR LVR 180031	
		Geb. / Birth		Speen / Wean	12M	18M	GDF	W/D	SD	F/P		Moer / Dam SPOOR LVR 180025	
	Indekse / Indices												
	T. waardes / B. values	94	101	102	91	102	105	98	104	102	95		

DRAFT

Extended Pedigree Certificate

compiled by S.A. Stud Book and Animal Improvement Association

BREED: ANGUS S.A.

SA STAMBOEK STUD BOOK

ANGUS

NAME: SPOOR LVR 220014 **D.O.B.** 2022/10/14 **STATUS:** REG
REGNO: 0096617071 **SEX:** MALE **HERDBOOK SECTION:** PEN
IDNO: AANMLVR 220014 **LABNO:** U17098U006

OWNER: MNR. L. VAN ROOYEN **ADDRESS:** MNR. L. VAN ROOYEN, POSBUS 7343, BLANCO, 6531

BREEDER: MNR. L. VAN ROOYEN **ADDRESS:** MNR. L. VAN ROOYEN, POSBUS 7343, BLANCO, GEORGE, 6531

NAME: SPOOR LVR 220014
REGNO: 0096617071
IDNO. AANMLVR 220014
D.O.B. 2022/10/14
SECTION : PEN / PRF
LABNO : U17098U006 INB : 0%
HORNPOLL :

S — SPOOR LVR 180031
IDNo.: AANMLVR 180031
Regno.: 0087815999
Section: SP / 61
Labno.: U17944U001 INB: 0%
Hornpoll:

SS — RED CORNER CREEK CASH 2R
IDNo.: 2R
Regno.: 0079305736
Section: SP / 61
Labno.: PSER2064 INB: 0%
Hornpoll:

SSS — RED PIE ATLANTIC 2204
IDNo.: 2204
Regno.: 0071719272
Section: - / -
Labno.: - INB: 0%
Hornpoll:

SSSS — RED COLE MISTER E 9J
IDNo.: 9J Hornpoll
Regno.: 0071719264 INB: 0%

SSSD — RED PIE BOTEET 899
IDNo.: 899 Hornpoll
Regno.: 0071719256 INB: 0%

SSD — RED NORTHLINE PEINCESS 59L
IDNo.: 59L
Regno.: 0079304580
Section: - / -
Labno.: - INB: 0%
Hornpoll:

SSDS — RED NORTHLINE KING 305J
IDNo.: 305J Hornpoll
Regno.: 0073776643 INB: 0%

SSDD — RED KWS ROCKY PRINCESS 59J
IDNo.: J59 Hornpoll
Regno.: 0079304572 INB: 0%

SD — SPOOR LADY JOKER 1
IDNo.: AANFLVR 090016
Regno.: 0070898226
Section: SP / 61
Labno.: U432511 INB: 0%
Hornpoll:

SDS — SPOOR MR WESTERN JOKER
IDNo.: AANMLVR 940235
Regno.: 0032121410
Section: SP / 56
Labno.: XSB990914INB: 1%
Hornpoll:

SDSS — HOFF WESTERN SC 456
IDNo.: 11656499 Hornpoll
Regno.: 0027628767 INB: 0%

SDSD — ROSEWICK SKY ATHENA
IDNo.: AANFSH H 0249 Hornpoll
Regno.: 0014979173 INB: 0%

SDD — LOUMOTTA MARNUS
IDNo.: AANFAC 990563
Regno.: 0042424135
Section: SP / 61
Labno.: - INB: 8%
Hornpoll:

SDDS — LOUMOTTA JACK
IDNo.: AANMAC 960289 Hornpoll
Regno.: 0036233666 INB: 4%

SDDD — POHL VENITA EP 9424
IDNo.: AANFEP 940024 Hornpoll
Regno.: 0029931193 INB: 1%

DS — RED SOO LINE POWER EYE 161X
IDNo.: SOO 161X
Regno.: 0084062942
Section: SP / 61
Labno.: U276631 INB: 0%
Hornpoll:

DSS — RED COCKBURN RIBEYE 308U
IDNo.: CWJ308U
Regno.: 0084062355
Section: - / -
Labno.: - INB: 0%
Hornpoll:

DSSS — RED BAR E L RIBEYE 103R
IDNo.: 103R Hornpoll
Regno.: 0084062314 INB: 0%

DSSD — RED WILBAR CORA 443P
IDNo.: WDM443P Hornpoll
Regno.: 0084062348 INB: 0%

D — SPOOR LVR 180025
IDNo.: AANFLVR 180025
Regno.: 0089226310
Section: SP / 61
Labno.: - INB: 0%
Hornpoll:

DSD — RED TR LYNN 301R
IDNo.: CBT301R
Regno.: 0084062934
Section: - / -
Labno.: - INB: 0%
Hornpoll:

DSDS — RED GEIS KNIGHT HAWK 1402
IDNo.: GEIS14M Hornpoll
Regno.: 0084062660 INB: 0%

DSDD — TR LYNN 105L
IDNo.: 105L Hornpoll
Regno.: 0084062884 INB: 0%

DD — EDRIC ERF1402
IDNo.: AANFERF 140002
Regno.: 0081220501
Section: SP / 61
Labno.: U432524 INB: 1%
Hornpoll:

DDS — LOUMOTTA LEGEND
IDNo.: AANMAC 100568
Regno.: 0071468219
Section: SP / 61
Labno.: U000013919INB: 8%
Hornpoll:

DDSS — LOUMOTTA SUGAR
IDNo.: AANMAC 070283 Hornpoll
Regno.: 0065118010 INB: 0%

DDSD — LOUMOTTA CAR LADY 3
IDNo.: AANFAC 060169 Hornpoll
Regno.: 0062822168 INB: 0%

DDD — PRINSVLEI CAP'S VIOLET
IDNo.: AANFPV 050090
Regno.: 0062113329
Section: SP / 61
Labno.: - INB: 2%
Hornpoll:

DDDS — PRINSVLEI CAP
IDNo.: AANMPV 010007 Hornpoll
Regno.: 0044619203 INB: 5%

DDDD — PRINSVLEI VIOLET 99
IDNo.: AANFPV 990033 Hornpoll
Regno.: 0042129346 INB: 1%

Report version 1.003 Generated by logix

LOT NR 3				
Verkoper	**Beskrywing**	**Aantal**	**Koper**	**Prys**
Spoor Angus / A. Moolman	Angus Bul SP	1		

***LVR 22 0013**

***'n Lang, harde bul wat swaar speenkalwers teel**

SA STAMBOEK STUD BOOK

Extended Pedigree Certificate

compiled by S.A. Stud Book and Animal Improvement Association

ANGUS

BREED: ANGUS S.A.

NAME: SPOOR LVR 220013 **D.O.B.** 2022/10/14 **STATUS:** REG
REGNO: 0095063509 **SEX:** MALE **HERDBOOK SECTION:** PEN
IDNO: AANMLVR 220013 **LABNO:** U17098U005

OWNER: MNR. L. VAN ROOYEN **ADDRESS:** MNR. L. VAN ROOYEN, POSBUS 7343, BLANCO, 6531

BREEDER: MNR. L. VAN ROOYEN **ADDRESS:** MNR. L. VAN ROOYEN, POSBUS 7343, BLANCO, GEORGE, 6531

NAME: SPOOR LVR 220013
REGNO: 0095063509
IDNO. AANMLVR 220013
D.O.B. 2022/10/14
SECTION : PEN / PRF
LABNO : U17098U005 INB : 1%
HORNPOLL :

S — SOO LINE LOCOMOTIVE 1403
IDNo.: SOO403Y
Regno.: 0084052398
Section: SP / 56
Labno.: U316133 INB: 0%
Hornpoll:

SS — SOO LINE MOTIVE 9016
IDNo.: 9016
Regno.: 0084051952
Section: - / -
Labno.: - INB: 0%
Hornpoll:

SSS — HF KODIAK 5R
IDNo.: 5R
Regno.: 0073756041
Section: SP / SP
Labno.: U163304 INB: 0%
Hornpoll:

SSSS — SANDY BAR ADVANTAGE 43M
IDNo.: 43M Hornpoll
Regno.: 0073756033 INB: 0%

SSSD — WILBAR RUBY 955N
IDNo.: 955N Hornpoll
Regno.: 0073756009 INB: 0%

SSD — TLA BEAUTY 5R
IDNo.: 5R
Regno.: 0084051945
Section: - / -
Labno.: - INB: 0%
Hornpoll:

SSDS — RR 7407 RAINMAKER 2154
IDNo.: 2154 Hornpoll
Regno.: 0084051937 INB: 0%

SSDD — TERRLENE BEAUTY 35F
IDNo.: 35F Hornpoll
Regno.: 0084051929 INB: 0%

SD — SHADY BROOK EVERENTENSE 2
IDNo.: 2039
Regno.: 0084052117
Section: - / -
Labno.: - INB: 0%
Hornpoll:

SDS — S A V FINAL ANSWER 0035
IDNo.: 0035
Regno.: 0065000523
Section: SP / 56
Labno.: C16-12687 INB: 0%
Hornpoll:

SDSS — SITZ TRAVELER 8180
IDNo.: 10D Hornpoll
Regno.: 0049335417 INB: 1%

SDSD — S A V EMULOUS 8145
IDNo.: 8145 Hornpoll
Regno.: 0065000531 INB: 0%

SDD — SCR EVERELDA ENTENSE 748
IDNo.: 748SCR
Regno.: 0084052109
Section: - / -
Labno.: - INB: 0%
Hornpoll:

SDDS — N BAR EMULATION EXT 849773
IDNo.: EXT849773 Hornpoll
Regno.: 0084052091 INB: 0%

SDDD — BT EVERELDA ENTENSE 579L
IDNo.: 579L Hornpoll
Regno.: 0084052083 INB: 0%

D — SPOOR LVR 170050
IDNo.: AANFLVR 170050
Regno.: 0086051711
Section: SP / 56
Labno.: - INB: 2%
Hornpoll:

DS — LT BANDO 5989074
IDNo.: 9074
Regno.: 0062114335
Section: SP / 56
Labno.: PSER723 INB: 0%
Hornpoll:

DSS — 598 BANDO 5175 44
IDNo.: 5175
Regno.: 0046032090
Section: SP / 56
Labno.: PSER35 INB: 0%
Hornpoll:

DSSS — BON VIEW BANDO 598
IDNo.: 598 Hornpoll
Regno.: 0039950019 INB: 0%

DSSD — SAF ROYAL LASS 1002
IDNo.: 11560533 Hornpoll
Regno.: 0046031639 INB: 1%

DSD — -
IDNo.: -
Regno.: -
Section: - / -
Labno.: - INB: -%
Hornpoll:

DSDS — -
IDNo.: - Hornpoll
Regno.: - INB: -%

DSDD — -
IDNo.: - Hornpoll
Regno.: - INB: -%

DD — COPELANDS BEEF MISS CBC072
IDNo.: AANFCBC 070259
Regno.: 0065265001
Section: SP / 56
Labno.: U432528 INB: 2%
Hornpoll:

DDS — MEQUATLING BILLY BOB
IDNo.: AANMWB 040046
Regno.: 0048606404
Section: SP / 56
Labno.: PSER869 INB: 1%
Hornpoll:

DDSS — VERMILLION DATELINE 7078
IDNo.: 7078 Hornpoll
Regno.: 0047527577 INB: 0%

DDSD — MEQUATLING EQUINOX 972
IDNo.: AANFWB 990972 Hornpoll
Regno.: 0041818022 INB: 0%

DDD — MEQUATLING BARDOLENA KINK
IDNo.: AANFWB 000001
Regno.: 0042749317
Section: SP / 56
Labno.: X000001978 INB: 0%
Hornpoll:

DDDS — CONNEALY KINCAID
IDNo.: 12595863 Hornpoll
Regno.: 0040725095 INB: 3%

DDDD — GK BETSY BARDOLENA 323A
IDNo.: 11641382 Hornpoll
Regno.: 0039209564 INB: 0%

Driegenerasiestamboom

saamgestel deur die S.A. Stamboek- en Diereverbeteringsvereniging

ANGUS S.A.

LOGIX

0433151000
MNR. L. VAN ROOYEN
POSBUS 7343
BLANCO
6531

Naam SPOOR LVR 220013

Ident. nommer:	LVR 220013
Reg. nommer:	0095063509
Geboorte Datum:	14/10/22
Geslag:	Manlik
DNA Nr:	U17098U005
INTELING:	1%
Afdeling:	PEN
Onderafdeling:	PRF

Vaar: SOO LINE LOCOMOTIVE 1403 - 01/11/11
SOO403Y 0084052398
Afdeling SP DNA Nr U316133

P.G. Vaar: SOO LINE MOTIVE 9016 - 01/01/02
9016 0084051952
Afdeling - DNA Nr

P.G. Moer: SHADY BROOK EVERENTENSE 2039 - 01/01/02
2039 0084052117
Gem TKP: () OEK: * (GGV: -)
Afdeling - DNA Nr

Moer: SPOOR LVR 170050 - 10/09/17
LVR 170050 0086051711
Gem TKP: 419 (3) OEK: 34 (GGV: -)
Kalwings: 06/20 09/21 10/22
Afdeling SP DNA Nr

M.G. Vaar: LT BANDO 5989074 - 07/03/99
9074 0062114335
Afdeling SP DNA Nr PSER723

M.G. Moer: COPELANDS BEEF MISS CBC07259 - 09/10/07
CBC 070259 0065265001
Gem TKP: 937 (4) OEK: 27 (GGV: -)
Afdeling SP DNA Nr U432528

09/2024	KALF GEMAK ★★★★		MELK ★★★½	KALFGROEI ★★★	ONDERHOUD ★★★½		GROEI TOETS					VRUGBAARHEID ★★★½			KOEI WAARDE ★★★½	GROEI WAARDE ★★★★	PRODUKSIE WAARDE –
Seleksie Waarde	111 60		106 43	98 54	101 28							102 37					
	Geb gew	Geb Mat	Melk	Speen gew	Naspeen	Volw. gewig	GDT	Kleiber	VOV	Lengte	Hoogte	SO	OEK	TKP			
TW Indeks	111	101	106	98	106	98	115	120	114	101	96	105	104	100	105 41	112 24	106 38
Teelwaarde	0.48 69	0.33 48	7.4 43	25.7 54	56.7 42	35.2 28	275.8 30	158.7 30	109.6 15	45.9 32	-.3 33	24.4 33	-4.1 43	-2.6 19			
Metings	34			- (-)	- (-)	- (-)	-	-	-								

LOT NR 4				
Verkoper	**Beskrywing**	**Aantal**	**Koper**	**Prys**
Spoor Angus / A. Moolman	Rooi Angus Bul SP	1		

***LVR 22 0019**

***Mediumraam, harde Rooi Angus Bul wat op verse gebruik kan word en homself sal handhaaf in moeilike omstandighede**

SA STAMBOEK STUD BOOK

Extended Pedigree Certificate

compiled by S.A. Stud Book and Animal Improvement Association

ANGUS

BREED: ANGUS S.A.

NAME: SPOOR LVR 220019 **D.O.B.** 2022/10/15 **STATUS:** REG
REGNO: 0095063442 **SEX:** MALE **HERDBOOK SECTION:** PEN
IDNO: AANMLVR 220019 **LABNO:** U17098U008

OWNER: MNR. L. VAN ROOYEN **ADDRESS:** MNR. L. VAN ROOYEN, POSBUS 7343, BLANCO, 6531

BREEDER: MNR. L. VAN ROOYEN **ADDRESS:** MNR. L. VAN ROOYEN, POSBUS 7343, BLANCO, GEORGE, 6531

NAME: SPOOR LVR 220019
REGNO: 0095063442
IDNO. AANMLVR 220019
D.O.B. 2022/10/15
SECTION : PEN / PRF
LABNO : U17098U008 INB : 0%
HORNPOLL :

S
- SS: DKF ELIMINATOR 15A, IDNo.: 15A, Regno.: 0087464152, Section: - / -, Labno.: - INB: 0%, Hornpoll:
  - SSS: S A V ELIMINATOR 9105, IDNo.: 9105W, Regno.: 0081213084, Section: - / -, Labno.: - INB: 0%, Hornpoll:
    - SSSS: RITO 707 OF IDEAL 3407 7075, IDNo.: 34077075, Regno.: 0078173671, Hornpoll, INB: 0%
    - SSSD: S A V ABIGALE 5646, IDNo.: 5646, Regno.: 0081206641, Hornpoll, INB: 0%
  - SSD: RED DKF MISS POWER 17P, IDNo.: 17P, Regno.: 0087464145, Section: - / -, Labno.: - INB: 0%, Hornpoll:
    - SSDS: EWD LSF PERAMOUNT 1286K, IDNo.: 1286K, Regno.: 0087464137, Hornpoll, INB: 0%
    - SSDD: RED RS LAKOTA TESS, IDNo.: 947133, Regno.: 0087464129, Hornpoll, INB: 0%
- SD: DKF MISS NET WORTH 21A, IDNo.: 21A, Regno.: 0087464210, Section: - / -, Labno.: - INB: 0%, Hornpoll:
  - SDS: S A V NET WORTH 4200, IDNo.: 4200, Regno.: 0063171318, Section: SP / 56, Labno.: X0000031672 INB: 1%, Hornpoll:
    - SDSS: S A V 8180 TRAVELER 004, IDNo.: 004, Regno.: 0049335391, Hornpoll, INB: 2%
    - SDSD: S A V MAY 2410, IDNo.: 2410, Regno.: 0063171276, Hornpoll, INB: 0%
  - SDD: DKF MISS POWER UP 95X, IDNo.: 95X, Regno.: 0087464202, Section: - / -, Labno.: - INB: 0%, Hornpoll:
    - SDDS: MICH POWER UP 32U, IDNo.: 32U, Regno.: 0087464194, Hornpoll, INB: 0%
    - SDDD: DKF MISS RIGHT TIME 97U, IDNo.: 97U, Regno.: 0087464186, Hornpoll, INB: 0%

D
- DS: RED SOO LINE POWER EYE 161X, IDNo.: SOO 161X, Regno.: 0084062942, Section: SP / 61, Labno.: U276631 INB: 0%, Hornpoll:
  - DSS: RED COCKBURN RIBEYE 308U, IDNo.: CWJ308U, Regno.: 0084062355, Section: - / -, Labno.: - INB: 0%, Hornpoll:
    - DSSS: RED BAR E L RIBEYE 103R, IDNo.: 103R, Regno.: 0084062314, Hornpoll, INB: 0%
    - DSSD: RED WILBAR CORA 443P, IDNo.: WDM443P, Regno.: 0084062348, Hornpoll, INB: 0%
  - DSD: RED TR LYNN 301R, IDNo.: CBT301R, Regno.: 0084062934, Section: - / -, Labno.: - INB: 0%, Hornpoll:
    - DSDS: RED GEIS KNIGHT HAWK 1402, IDNo.: GEIS14M, Regno.: 0084062660, Hornpoll, INB: 0%
    - DSDD: TR LYNN 105L, IDNo.: 105L, Regno.: 0084062884, Hornpoll, INB: 0%
- DD: SPOOR LVR 180013, IDNo.: AANFLVR 180013, Regno.: 0088863899, Section: SP / 61, Labno.: - INB: 0%, Hornpoll:
  - DDS: LODI PRINCE 2632, IDNo.: ROY82632, Regno.: 0046384673, Section: SP / 61, Labno.: X10088 INB: 0%, Hornpoll:
    - DDSS: RED CALIFORNIA SUPREME 2087, IDNo.: 508490, Regno.: 0046330353, Hornpoll, INB: 0%
    - DDSD: RED JIL 2560, IDNo.: 483529, Regno.: 0046330361, Hornpoll, INB: 0%
  - DDD: NICELLE LODI'S PRINCESS, IDNo.: AANFNM 080017, Regno.: 0066875873, Section: SP / 61, Labno.: - INB: 0%, Hornpoll:
    - DDDS: CARWIN RED G 99 474, IDNo.: AANFG 990474, Regno.: 0041866534, Section: SP / 61, Labno.: U32288 INB: 1%, Hornpoll:
      - DDDS: CARWIN RED G95 336, IDNo.: AANMG 950336, Regno.: 0034030619, Hornpoll, INB: 0%
      - DDDD: CARWIN RED G95 338, IDNo.: AANFG 950338, Regno.: 0034030692, Hornpoll, INB: 0%

Report version 1.003 Generated by logix

Driegenerasiestamboom

saamgestel deur die S.A. Stamboek- en Diereverbeteringsvereniging

ANGUS S.A.

LOGIX

0433151000
MNR. L. VAN ROOYEN
POSBUS 7343
BLANCO
6531

Naam SPOOR LVR 220019

Ident. nommer:	LVR 220019
Reg. nommer:	0095063442
Geboorte Datum:	15/10/22
Geslag:	Manlik
DNA Nr:	U17098U008
INTELING:	0%
Afdeling:	PEN
Onderafdeling:	PRF

Vaar: RED DKF RAZOR 55C - 27/01/15
DKF 55C 0087464236
Afdeling SP DNA Nr U419910

P.G. Vaar: DKF ELIMINATOR 15A - 01/01/05
15A 0087464152
Afdeling - DNA Nr

P.G. Moer: DKF MISS NET WORTH 21A - 01/01/06
21A 0087464210
Gem TKP: () OEK: * (GGV: -)
Afdeling - DNA Nr

Moer: SPOOR LVR 180013 - 29/08/18
LVR 180013 0088863899
Gem TKP: 339 (4) OEK: 38 (GGV: -)
Kalwings: 10/21 10/22 09/23 08/24
Afdeling SP DNA Nr

M.G. Vaar: RED SOO LINE POWER EYE 161X - 04/02/10
SOO 161X 0084062942
Afdeling SP DNA Nr U276631

M.G. Moer: NICELLE LODI'S PRINCESS - 05/06/08
NM 080017 0066875873
Gem TKP: 446 (9) OEK: 30 (GGV: -)
Afdeling SP DNA Nr

09/2024	KALF GEMAK ★★★		MELK ★★★	KALFGROEI ★★★★	ONDERHOUD ★★★		GROEI TOETS					VRUGBAARHEID ★★★★			KOEI WAARDE ★★★★	GROEI WAARDE ★★★★	PRODUKSIE WAARDE –
Seleksie Waarde	98 64		90 51	112 59	94 47							115 45					
	Geb gew	Geb Mat	Melk	Speen gew	Naspeen	Volw. gewig	GDT	Kleiber	VOV	Lengte	Hoogte	SO	OEK	TKP			
TW Indeks	86	113	90	112	112	106	120	123	122	109	130	115	119	103	113 48	114 33	113 45
Teelwaarde	2.84 70	-.15 55	3 51	33.2 59	62.5 52	45.3 47	297.7 49	166.4 49	128.3 15	52.9 51	2.3 52	29.2 51	-15.6 53	-3.1 31			
Metings	33			- (-)	- (-)	- (-)	-	-	-								

LOT NR 5				
Verkoper	**Beskrywing**	**Aantal**	**Koper**	**Prys**
Knoetzekamma Limousines	Limousin Bul SP	1		

***JJ2134 - LAMBORGHINI**

Identification: JJ2134
Sex: Male
Birth Date: 16/12/2021
Computer Number: 8797245506
HerdBook: SP
Status: Active
Registration Status: Registered
Breeder: J.J. WATSON
Current Owner: J.J. WATSON
Parent Verification: Profiled #12315U028
Progeny: *None*
EBV Graph: [View]

NELOMBO
THETIS
OVALE
Sire: KNOETZEKAMMA INVINCIBLE
LA RHONE JACKNIFE
KNOETZEKAMMA FAIRY CADETTE
KNOETZEKAMMA WL0702 CADETTE
Animal: KNOETZEKAMMA LAMBORGHINI
JUNIOR
KNOETZEKAMMA JUDGE
MARLIBA MELANI
Dam: KNOETZEKAMMA GETA
VERGESIGTE 96 32 GENOEG VANDAL
MOOIZICHT VGV GRETA
JACRE GRETA VG9520

August 2024 Southern Limousin Single-Step BREEDPLAN																	
	Calving Ease DIR (%)	Calving Ease DTRS (%)	Gestation Length (days)	Birth Wt. (kg)	200 Day Wt (kg)	400 Day Wt (kg)	600 Day Wt (kg)	Mat Cow Wt (kg)	Milk (kg)	Scrotal Size (cm)	Carcase Wt (kg)	Eye Muscle Area (sq cm)	Rib Fat (mm)	Rump Fat (mm)	Retail Beef Yield (%)	IMF (%)	Docility (%)
EBV	+0.1	-	+0.3	+1.9	+15	+26	+35	+46	+6	0.0	+24	-	-	-	-	-	-
Accuracy	31%	-	36%	63%	61%	64%	69%	58%	41%	69%	50%	-	-	-	-	-	-
Breed Avg. EBVs for 2022 Born Calves Click for Percentiles																	
EBV	+0.0	+0.4	-0.4	+2.1	+17	+26	+37	+38	+6	+0.9	+21	+0.5	+0.1	-0.1	+0.4	+0.0	+20

Traits Analysed: BWT,200WT,400WT,600WT,SS

LOT NR 6				
Verkoper	**Beskrywing**	**Aantal**	**Koper**	**Prys**
Knoetzekamma Limousines	Limousin Bul SP	1		

***JJ2122 - LUXOR**

Identification: JJ2122
Sex: Male
Birth Date: 04/11/2021
Computer Number: 8797240655
HerdBook: SP
Status: Active
Registration Status: Registered
Breeder: J.J. WATSON
Current Owner: J.J. WATSON
Parent Verification: Profiled #12315U016
Progeny: *None*
EBV Graph: [View]

NELOMBO
THETIS
OVALE
Sire: KNOETZEKAMMA INVINCIBLE
LA RHONE JACKNIFE
KNOETZEKAMMA FAIRY CADETTE
KNOETZEKAMMA WL0702 CADETTE
Animal: KNOETZEKAMMA LUXOR
GENIAL
KNOETZEKAMMA
KNOETZEKAMMA VALROMEY 1
Dam: KNOETZEKAMMA ANETT
BON CHANCE ETOR
KNOETZEKAMMA KNOETZE 03 03 ETOR
KNOETZEKAMMA POWER LADY

August 2024 Southern Limousin Single-Step BREEDPLAN																	
	Calving Ease DIR (%)	Calving Ease DTRS (%)	Gestation Length (days)	Birth Wt. (kg)	200 Day Wt (kg)	400 Day Wt (kg)	600 Day Wt (kg)	Mat Cow Wt (kg)	Milk (kg)	Scrotal Size (cm)	Carcase Wt (kg)	Eye Muscle Area (sq cm)	Rib Fat (mm)	Rump Fat (mm)	Retail Beef Yield (%)	IMF (%)	Docility (%)
EBV	-1.1	-	+0.4	+3.5	+23	+36	+55	+61	+7	+1.4	+29	-	-	-	-	-	-
Accuracy	31%	-	39%	69%	65%	67%	71%	56%	41%	70%	50%	-	-	-	-	-	-
Breed Avg. EBVs for 2022 Born Calves Click for Percentiles																	
EBV	+0.0	+0.4	-0.4	+2.1	+17	+26	+37	+38	+6	+0.9	+21	+0.5	+0.1	-0.1	+0.4	+0.0	+20

Traits Analysed: BWT,200WT,400WT,600WT,SS

LOT NR 7				
Verkoper	**Beskrywing**	**Aantal**	**Koper**	**Prys**
Stansim Simmentaler	Simmentaler Bul SP	1		

***CSS 22310**

STANSIM KARATARA (AI) — CSS22310 — Lot. 7

STANSIM SIMMENTALERS, POSBUS 1581 FAERIE GLEN 0043 TEL:27827770250 — **SIMMENTALER**

OFFICIAL RECORD / AMPTELIKE REKORD
Outeniqua Interrasveiling, 18/10/2024

Birth Date: 21/03/2022 **DNA: P2851/22, PV**
Age: 30 months
Herdbook: SP
Horn: Horned

Reg. Status: REG **MALE/MANLIK**
Inspection Date: 14/11/2023
Reg. No: 103595245

SIRE / VAAR:
- PN09581 LEEUPOORT ZAGREB Horned
- PN1297 LEEUPOORT ZAIRE
  - PN08215 LEEUPOORT CORRIE
- **NV1717 VON-ADEL ZURICH**
  - UG0481 SALERIKA EKSELLENT Polled
- NV077 VON-ADEL HANEKS *** Horned
  - NV9711 VON-ADEL HANNA

DAM / MOER:
- UG02113 SALERIKA ZENO PP
- UG069 SALERIKA MALLICK (P) Polled
  - UG044 SALERIKA UG044 *** Polled
- **CCE1313 VERA ROLIE** Polled
  - Simdex: 92 ICP: 428
  - Calving dates: 04/07/2023 21/03/2022 22/01/2022 15/01/2022 31/12/2021 18/09/2020 02/09/2020 07/04/2019 28/02/2018 04/03/2017 31/03/2016 26/04/2015
- CMO0452 RU-DEV NIEL
- CCE0846 VERA RONIE *** Horned
  - CCE063 VERA ROPA Horned

August 2024 South African Simmentaler BREEDPLAN — *Simmentaler SA-- www.simmentaler.org*

2024	CED	CEM	BW	200	400	600	MCW	MILK	SC	DC	CWT	EMA	Rib	Rump	IMF%	RBY%	NFI P	SBI (R)	SPI (R)
EBV	**+1.9**	**+0.9**	**+1.5**	**+19**	**+32**	**+36**	**+42**	**+6**	**-0.7**	**+2.0**	**+23**	**+0.6**	**-0.6**	**-0.8**	**+0.1**	**+0.6**	**-0.24**	**+430**	**+460**
ACC	*42%*	*35%*	*71%*	*60%*	*61%*	*59%*	*56%*	*39%*	*61%*	*27%*	*48%*	*38%*	*42%*	*42%*	*33%*	*41%*	*44%*		
BREED	+0.3	+0.6	+1.6	+17	+28	+34	+36	+5	+0.3	-0.7	+20	+0.4	+0.0	+0.0	+0.1	+0.3	-0.03	+490	+475

Traits observed: BWT 200WT 400WT SS FAT EMA IMF NFI-P

Seller's remarks / Verkoper se kommentaar:

R _____

LOT NR 8				
Verkoper	**Beskrywing**	**Aantal**	**Koper**	**Prys**
Stansim Simmentaler	Simmentaler Bul SP	1		

***CSS 22341**

STANSIM HANS (AI) (ET) — CSS22341 — Lot. 8

STANSIM SIMMENTALERS, POSBUS 1581 FAERIE GLEN 0043 TEL:27827770250 — **SIMMENTALER**

OFFICIAL RECORD / AMPTELIKE REKORD
Outeniqua Interrasveiling, 18/10/2024

Birth Date: 05/08/2022 **DNA: P932/24, PV**
Age: 26 months
Herdbook: SP
Horn: Horned

Reg. Status: REG **MALE/MANLIK**
Inspection Date: 14/11/2023
Reg. No: 103628384

SIRE / VAAR:
- CE0844 SIMLEE ESAU Polled
- AGO1268 ODENSIM EZAU 3 Polled
  - AGO0486 ODENSIM JUCHAMA ***
- **VLB15219 VLENSBURG LOTTO 15219** Polled
  - IP0543 NAWINA ELS 4DE (P) Polled
- VLB0936 VLENSBURG LOTTE 0936 P Polled
  - VLB0671 VLENSBURG LORCA 0671 P Polled

DAM / MOER:
- +T391534 GIDSCO APPOLLO 3F
- 591250 R FIVE MALTESE
  - +T538963 FGAF SHES ALL THAT 724K
- **JVL1118 LEWENSLUS ANITA ****** Horned
  - Simdex: 100 ICP: 382
  - Calving dates: 05/08/2022 17/07/2022 12/02/2022 10/04/2021 10/02/2020 01/11/2018 04/01/2018 06/01/2017 08/02/2016 13/01/2015 05/10/2013
- JVL0138 LEWENSLUS PENBEWARD
- JVL0611 LEWENSLUS AMBED 2E *
  - JVL9918 LEWENSLUS AMBED

August 2024 South African Simmentaler BREEDPLAN — *Simmentaler SA-- www.simmentaler.org*

2024	CED	CEM	BW	200	400	600	MCW	MILK	SC	DC	CWT	EMA	Rib	Rump	IMF%	RBY%	NFI P	SBI (R)	SPI (R)
EBV	**-8.3**	**-2.8**	**+2.4**	**+22**	**+39**	**+50**	**+52**	**+3**	**+0.8**	**--**	**+29**	**+1.0**	**+0.1**	**+0.2**	**+0.3**	**+0.3**	**+0.00**	**+404**	**+402**
ACC	*42%*	*37%*	*60%*	*53%*	*53%*	*53%*	*51%*	*45%*	*39%*		*42%*	*27%*	*29%*	*29%*	*25%*	*29%*	*27%*		
BREED	+0.3	+0.6	+1.6	+17	+28	+34	+36	+5	+0.3	-0.7	+20	+0.4	+0.0	+0.0	+0.1	+0.3	-0.03	+490	+475

Traits observed: BWT

Seller's remarks / Verkoper se kommentaar:

R _____

LOT NR 9				
Verkoper	**Beskrywing**	**Aantal**	**Koper**	**Prys**
Stansim Simmentaler	Simmentaler Bul SP	1		

***CSS 22327**

STANSIM HONEYMOON2 (AI) (ET) — CSS22327 — Lot. 9

STANSIM SIMMENTALERS, POSBUS 1581 FAERIE GLEN 0043 TEL:27827770250 — **SIMMENTALER**

Birth Date: 15/07/2022 **DNA: P2863/22, PV**
Age: 27 months
Herdbook: SP
Horn: Polled

Reg. Status: REG **MALE/MANLIK**
Inspection Date: 14/11/2023
Reg. No: 103628269

SIRE / VAAR:
- UG9713 SALERIKA MIDAS (P) Polled
- SDJ9926 AI-AI MORRIS Polled
  - SDJ9521 AI-AI VALENSIE
- **KS02100 KYKSIM HONEYMOON** Polled
  - 3047963 BALATON
- MS94168 KYKSO DAUBA
  - MS9233 KYKSO DAUKA

DAM / MOER:
- MS9752 KYKSO BANO
- KS028 KYKSIM BANOL
  - MS9545 KYKSO NOLKAHA ***
- **KS0560 KYKSIM ANBAL**
  Simdex: 82 ICP: 455
  Calving dates: 24/05/2023 28/07/2022 15/07/2022 13/10/2020 23/01/2019 28/12/2018 25/12/2018 21/12/2018 15/12/2018 18/12/2017 04/12/2017 30/11/2017 14/11/2017 17/04/2017(FI) 07/07/2016 22/03/2015 31/01/2014 03/01/2014 01/01/2014 27/08/2013
- MS93160 KYKSO HAMI
- MS99191 KYKSO ANHAMI
  - MS9663 KYKSO ANHA *

August 2024 South African Simmentaler BREEDPLAN — *Simmentaler SA-- www.simmentaler.org*

2024	CED	CEM	BW	200	400	600	MCW	MILK	SC	DC	CWT	EMA	Rib	Rump	IMF%	RBY%	NFI P	SBI (R)	SPI (R)
EBV	**-5.2**	**-4.4**	**+1.9**	**+12**	**+16**	**+17**	**+24**	**+6**	**-0.4**	**+1.3**	**+12**	**-0.1**	**-0.2**	**-0.2**	**+0.0**	**-0.1**	**--**	**+190**	**+254**
ACC	*54%*	*51%*	*65%*	*59%*	*59%*	*59%*	*59%*	*58%*	*34%*	*31%*	*51%*	*30%*	*38%*	*38%*	*33%*	*37%*			
BREED	+0.3	+0.6	+1.6	+17	+28	+34	+36	+5	+0.3	-0.7	+20	+0.4	+0.0	+0.0	+0.1	+0.3	-0.03	+490	+475

Traits observed: BWT

Seller's remarks / Verkoper se kommentaar:

R _____

OFFICIAL RECORD / AMPTELIKE REKORD
Outeniqua Interrasveiling, 18/10/2024

LOT NR 10				
Verkoper	**Beskrywing**	**Aantal**	**Koper**	**Prys**
Stansim Simmentaler	Simmentaler Bul SP	1		

***CSS 22417**

STANSIM GRAVIT (AI) (ET) — CSS22417 — Lot. 10

STANSIM SIMMENTALERS, POSBUS 1581 FAERIE GLEN 0043 TEL:27827770250 — **SIMMENTALER**

Birth Date: 16/01/2022 **DNA: P2844/22, PV**
Age: 33 months
Herdbook: SP
Horn: Polled

Reg. Status: REG **MALE/MANLIK**
Inspection Date: 14/11/2023
Reg. No: 103628616

SIRE / VAAR:
- UG0481 SALERIKA EKSELLENT Polled
- DJA094 ELLI'S ENDRICUS (ET) Polled
  - E9973 ERICO DERBAL ***
- **BMB1326 BOTHASIM KENSINGTON** Polled
  - KS02104 KYKSIM KAAN
- KS0587 KYKSIM KAAG ***
  - KS0383 KYKSIM KS0383

DAM / MOER:
- PN07147 LEEUPOORT BRITS Horned
- UG1176 SALERIKA UG11076 U Disbudded
  - UG0914 SALERIKA ULLA Disbudded
- **PN15442 LEEUPOORT PN15442**
  Simdex: 96 ICP: 435
  Calving dates: 20/07/2024 21/12/2022 07/03/2022 16/01/2022 15/01/2022 31/12/2021 28/12/2021 25/08/2020 24/03/2019 05/05/2018 02/06/2017
- PN09495 LEEUPOORT ART Polled
- PN13393 LEEUPOORT PN13393 Polled
  - PN0895 LEEUPOORT BITABOB * Horned

August 2024 South African Simmentaler BREEDPLAN — *Simmentaler SA-- www.simmentaler.org*

2024	CED	CEM	BW	200	400	600	MCW	MILK	SC	DC	CWT	EMA	Rib	Rump	IMF%	RBY%	NFI P	SBI (R)	SPI (R)
EBV	**-1.2**	**+2.0**	**+1.3**	**+15**	**+18**	**+25**	**+23**	**+5**	**+0.3**	**--**	**+12**	**--**	**--**	**--**	**--**	**--**	**--**	**+384**	**+406**
ACC	*40%*	*34%*	*58%*	*45%*	*43%*	*44%*	*43%*	*37%*	*31%*		*35%*								
BREED	+0.3	+0.6	+1.6	+17	+28	+34	+36	+5	+0.3	-0.7	+20	+0.4	+0.0	+0.0	+0.1	+0.3	-0.03	+490	+475

Traits observed: BWT

Seller's remarks / Verkoper se kommentaar:

R _____

OFFICIAL RECORD / AMPTELIKE REKORD
Outeniqua Interrasveiling, 18/10/2024

LOT NR 11				
Verkoper	**Beskrywing**	**Aantal**	**Koper**	**Prys**
Stansim Simmentaler	Simmentaler Bul SP	1		

***CSS 22363**

OFFICIAL RECORD / AMPTELIKE REKORD
Outeniqua Interrasveiling, 18/10/2024

STANSIM SPIEKER (AI) — CSS22363 — Lot. 11

STANSIM SIMMENTALERS, POSBUS 1581 FAERIE GLEN 0043 TEL:27827770250 — **SIMMENTALER**

Birth Date: 23/09/2022 **DNA: P2747/23, SV**
Age: 24 months
Herdbook: SP
Horn: Horned

Reg. Status: REG **MALE/MANLIK**
Inspection Date: 14/11/2023
Reg. No: 103664975

SIRE / VAAR:
- SPBPB028 BRENAIR PARK HAFKE [ET]
- JE12236 OMRUIL JE236
  - PA0432 PCK DALMIA
- **JPD1919 DE VIL SPIEKKERIES**
  - JPD0612 DE VIL MALGAS
- JPD096 DE VIL SANDTA 2DE Horned
  - JPD0215 DE VIL SANTA

DAM / MOER:
- E078 ERICO EKSELARO Polled
- E09183 ERICO 09183 Polled
  - E058 ERICO HAZPRO *** Polled
- **CSS16256 STANSIM MADAM** Polled
  Simdex: 107 Calving dates: 23/09/2022 25/08/2021 06/08/2020
  ICP: 349 31/07/2019(Ab) 28/11/2018
- LAT021 LATCO HAGER JUNIOR
- MAJ06104 INALLERWELT JODY
  - MAJ0112 INALLERWELT ENA 3DE

August 2024 South African Simmentaler BREEDPLAN — *Simmentaler SA-- www.simmentaler.org*

2024	CED	CEM	BW	200	400	600	MCW	MILK	SC	DC	CWT	EMA	Rib	Rump	IMF%	RBY%	NFI P	SBI (R)	SPI (R)
EBV	**-5.0**	**-1.5**	**+3.7**	**+15**	**+25**	**+36**	**+40**	**+5**	**+0.8**	**--**	**+21**	**+0.4**	**-0.2**	**-0.2**	**--**	**+0.4**	**+0.00**	**+335**	**+352**
ACC	*35%*	*28%*	*67%*	*57%*	*57%*	*55%*	*52%*	*31%*	*54%*		*42%*	*30%*	*34%*	*34%*		*31%*	*37%*		
BREED	+0.3	+0.6	+1.6	+17	+28	+34	+36	+5	+0.3	-0.7	+20	+0.4	+0.0	+0.0	+0.1	+0.3	-0.03	+490	+475

Traits observed: GL CE BWT 200WT 400WT SS FAT EMA NFI-P

Seller's remarks / Verkoper se kommentaar:

R _____

LOT NR 12				
Verkoper	**Beskrywing**	**Aantal**	**Koper**	**Prys**
Stansim Simmentaler	Simmentaler Bul SP	1		

***CSS 22353**

OFFICIAL RECORD / AMPTELIKE REKORD
Outeniqua Interrasveiling, 18/10/2024

STANSIM KING (AI) — CSS22353 — Lot. 12

STANSIM SIMMENTALERS, POSBUS 1581 FAERIE GLEN 0043 TEL:27827770250 — **SIMMENTALER**

Birth Date: 09/09/2022 **DNA: P2745/23, SV**
Age: 25 months
Herdbook: SP
Horn: Scurred

Reg. Status: REG **MALE/MANLIK**
Inspection Date: 14/11/2023
Reg. No: 103664868

SIRE / VAAR:
- PN09581 LEEUPOORT ZAGREB Horned
- PN1297 LEEUPOORT ZAIRE
  - PN08215 LEEUPOORT CORRIE
- **NV1717 VON-ADEL ZURICH**
  - UG0481 SALERIKA EKSELLENT Polled
- NV077 VON-ADEL HANEKS *** Horned
  - NV9711 VON-ADEL HANNA

DAM / MOER:
- E04105 ERICO NAPOLEON
- E08150 ERICO NAPRA Horned
  - AK006 TOVERBERG RAGEL
- **CSS1524 STANSIM NAPRASIE** Polled
  Simdex: 89 Calving dates: 29/07/2023 09/09/2022 14/03/2021 02/01/2021
  ICP: 433 02/12/2019 25/10/2018 27/08/2017
- LH0891 MACARARA MANGA Polled
- CSS121 STANSIM JENNATJIE Polled
  - CSS09126 STANSIM JENNA Polled

August 2024 South African Simmentaler BREEDPLAN — *Simmentaler SA-- www.simmentaler.org*

2024	CED	CEM	BW	200	400	600	MCW	MILK	SC	DC	CWT	EMA	Rib	Rump	IMF%	RBY%	NFI P	SBI (R)	SPI (R)
EBV	**-2.4**	**+1.7**	**+2.0**	**+13**	**+18**	**+23**	**+30**	**+3**	**-0.2**	**+0.6**	**+12**	**-0.5**	**-0.1**	**+0.0**	**--**	**-0.2**	**-0.05**	**+332**	**+372**
ACC	*42%*	*34%*	*70%*	*59%*	*59%*	*57%*	*54%*	*38%*	*57%*	*25%*	*46%*	*35%*	*39%*	*39%*		*37%*	*41%*		
BREED	+0.3	+0.6	+1.6	+17	+28	+34	+36	+5	+0.3	-0.7	+20	+0.4	+0.0	+0.0	+0.1	+0.3	-0.03	+490	+475

Traits observed: CE BWT 200WT 400WT SS FAT EMA NFI-P

Seller's remarks / Verkoper se kommentaar:

R _____

LOT NR 14				
Verkoper	**Beskrywing**	**Aantal**	**Koper**	**Prys**
Ganzekraal Herefords	Hereford Bul SP	1		

***HFDMGH 210010**

***Vleissentraal Elite 2024 Rasverteenwoordiger, Bloemfontein**

***Inentings: Miltsiek, Lamsiek, Sponssiekte**

LOT 1 (M)

SA HEREFORD

GH 210010

GANZEKRAAL OUPA 110

Herd Book	SP
Birth date	2021-06-29
Age	3y 4m
Inbreeding	1%

Parentage	Sire	Dam
DNA		
Genomic		

HVR 180004 HH
HOEKLAND LUTHER 804
Wean Mat. 91

GH 170023
GANZEKRAAL CAROLINE 723
Age 7y | AFC 22m | ICP 357d
Calves 6 | Weaned 5 | Wean Mat. 127
Avg. WI 110 | CCB 6.68 | CCW 45.9
Calvings: 19-08, 20-07, 21-06, 22-06, 23-06, 24-06

SLM 130041 HH
SYFERPAN STANMORE 1341
Wean Mat. 88

HVR 130022 HH
HOEKLAND PHYLLIDA 1322
Age 10y | AFC 33m | ICP 379d
Calves 8 | Weaned 8 | Wean Mat. 108
Avg. WI 108 | Wean Mat. 108

SLM 140006 HH
SYFERPAN 406
Wean Mat. 110

GH 150088
GANZEKRAAL CAROLINE 588
Age 9y | AFC 25m | ICP 354d
Calves 7 | Weaned 8 | Wean Mat. 110
Avg. WI 102 | Wean Mat. 110

47R
PDHR 20J STANMORE 47R

SLM 030014
SYFERPAN CAROLINE 179TH
Age 17y | Avg. WI 106
Calves 12 | Weaned 10

KJA 100024
LEMOENVLEI BOKSER 0024

SLM 040003
SYFERPAN PHYLLIDA 71ST
Age 10y | Avg. WI 99
Calves 8 | Weaned 8

43092364
CHURCHILL SENSATION 028X

SLM 050006
SYFERPAN CAROLINE 196 TH
Age 16y | Avg. WI 103
Calves 11 | Weaned 8

SLM 110017
SYFERPAN 117

GH 120008
GANZEKRAAL CAROLINE 208
Age 7y | Avg. WI 103
Calves 2 | Weaned 1

GANZEKRAAL HEREFORDS

George, Western Cape
0722866633
lynnecampher@gmail.com

POSBUS 100,,HEROLD, 6615

COW VALUE	100
100	Calving Ease Value
101	Calf Growth Value
106	Milk Value
84	Maintenance Value
94	Fertility Value
GROWTH VALUE	99
CARCASS VALUE	109
PRODUCTION VALUE	99

LOGIX GENETICS GENETRIX
EBV Analysis 2024-09-19

Calf and Mother				Fertility			
Birth Dir.	Birth Mat.	Wean Dir.	Wean Mat.	Scr. Circ.	Heifer Fert.	Cow Fert.	Longev.
103	92	101	106	105	89	104	88
76%	52%	72%	55%	73%	44%	25%	46%

Post-Wean Growth			Frame			Carcass		
Post Wean	ADG	FCR	Mature Weight	Height	Length	EMA	Fat	Mar
104	106	109	117	93	101	105	97	124
60%	65%	7%	44%	75%	72%	67%	61%	60%

Birth Weight	205D Weight	365D Weight	540D Weight	ADG Index	FCR Index	Scrotum	LH
38kg	320kg | *109 (10)*	-	-	1274g/d | *101 (13)*	-	353mm *(D1)*	1.16

Myostatin	
Q204X	Not Tested
NT821	Not Tested
F94L	Not Tested

SELLER REMARKS:

LOT NR 15				
Verkoper	**Beskrywing**	**Aantal**	**Koper**	**Prys**
Stansim Simmentalers	Simmentaler Koei Oop SP	1		

***PJ 152**

OELRA GESSA — PJ152 — Lot. 15

STANSIM SIMMENTALERS, POSBUS 1581 FAERIE GLEN 0043 TEL:27827770250 — **SIMMENTALER**

Birth Date: 25/03/2015 **Simdex:** 92 **Star:** **Reg. Status:** REG **FEMALE/VROULIK**
Age: 114 months **Days last calved:** 123 **ICP:** 424 **Inspection Date:** 22/01/2019
Herdbook: SP **Calvings:** 7 **Reg. No:** 102810462
Horn: Horned **Calving dates:** 06/06/2024 16/12/2022 14/12/2021 08/10/2020 21/09/2019 24/06/2018 21/06/2017

SIRE / VAAR:
- **CSS09144 STANSIM JAN SAK** Polled
  - NJC0532 MARLENCA DAMER (P) Polled
    - CMO0150 RU-DEV STROMER
    - JL9338 UITSUIP DAWN Polled
  - CSS068 STANSIM JANA Polled
    - KS02100 KYKSIM HONEYMOON Polled
    - GVW0067 GERMANDIA JANICE

DAM / MOER:
- **PJO094 TAAIBOSSPRUIT GEMMA** Horned
  Simdex: 93 ICP: 430 Calving dates: 13/03/2018 08/02/2017 07/03/2016 25/03/2015 15/11/2013 19/08/2012 20/02/2011
  - AGO0568 ODENSIM JOMA 2
    - CE032 SIMLEE JOTA
    - AGO9564 ODENSIM MARIA 2
  - PJO052 TAAIBOSSPRUIT GENFIE *
    - CMO9973 RU-DEV FRANCO
    - PJO9618 TAAIBOSSPRUIT GENZE

OFFICIAL RECORD / AMPTELIKE REKORD
Outeniqua Interrasveiling, 18/10/2024

August 2024 South African Simmentaler BREEDPLAN — *Simmentaler SA-- www.simmentaler.org*

2024	CED	CEM	BW	200	400	600	MCW	MILK	SC	DC	CWT	EMA	Rib	Rump	IMF%	RBY%	NFI P	SBI (R)	SPI (R)
EBV	+1.0	+0.1	+1.9	+12	+17	+18	+18	+4	--	--	+13	--	--	--	--	--	--	+410	+412
ACC	*48%*	*42%*	*74%*	*53%*	*50%*	*52%*	*52%*	*42%*			*39%*								
BREED	+0.3	+0.6	+1.6	+17	+28	+34	+36	+5	+0.3	-0.7	+20	+0.4	+0.0	+0.0	+0.1	+0.3	-0.03	+490	+475

Traits observed: BWT

Seller's remarks / Verkoper se kommentaar:
Oop

R _____

LOT NR 16				
Verkoper	**Beskrywing**	**Aantal**	**Koper**	**Prys**
Stansim Simmentalers	Simmentaler Koei Oop	1		

***WEL 17141**

OFFICIAL RECORD / AMPTELIKE REKORD
Outeniqua Interrasveiling, 18/10/2024

ANSIESKRAAL WEL17141 (AI) — WEL17141 — Lot. 16

STANSIM SIMMENTALERS, POSBUS 1581 FAERIE GLEN 0043 TEL:27827770250 — **SIMMENTALER**

Birth Date: 04/12/2017 **Simdex:** 91 **Star:** **Reg. Status:** REG **FEMALE/VROULIK**
Age: 82 months **Days last calved:** 325 **ICP:** 399 **Inspection Date:** 31/10/2019
Herdbook: SP **Calvings:** 4 **Reg. No:** 103156741
Horn: **Calving dates:** 28/11/2023 20/10/2022 27/07/2021 20/08/2020

SIRE / VAAR:
- IP0458 NAWINA VERUS
- GD1010 RANEPID COENIE Horned
  - GD0328 RANEPID CARIEN ***
- **UG1333 SALERIKA BERKO** Disbudded
  - UG0644 SALERIKA UTHA Disbudded
  - UG1023 SALERIKA UG10023 B * Polled
    - UG0634 SALERIKA UG0634 B Polled

DAM / MOER:
- UG0481 SALERIKA EKSELLENT Polled
- DJA094 ELLI'S ENDRICUS (ET) Polled
  - E9973 ERICO DERBAL ***
- **WEL1337 ANSIESKRAAL BOEBOE 1**
  Simdex: 102 Calving dates: 15/09/2020 17/09/2019 23/10/2018 04/12/2017
  ICP: 353 29/12/2016 17/11/2015
  - WEL9819 ANSIESKRAAL BARON
  - WEL0432 ANSIESKRAAL BOEBOE
    - WEL0112 ANSIESKRAAL MARIETJIE Polled

August 2024 South African Simmentaler BREEDPLAN — *Simmentaler SA-- www.simmentaler.org*

2024	CED	CEM	BW	200	400	600	MCW	MILK	SC	DC	CWT	EMA	Rib	Rump	IMF%	RBY%	NFI P	SBI (R)	SPI (R)
EBV	**+4.9**	**+5.5**	**+0.2**	**+12**	**+14**	**+18**	**+7**	**+2**	**+0.1**	**-0.4**	**+9**	**-0.4**	**+0.1**	**+0.2**	**+0.3**	**-0.1**	**--**	**+529**	**+521**
ACC	*50%*	*43%*	*74%*	*54%*	*52%*	*55%*	*54%*	*45%*	*40%*	*26%*	*44%*	*27%*	*33%*	*33%*	*27%*	*33%*			
BREED	+0.3	+0.6	+1.6	+17	+28	+34	+36	+5	+0.3	-0.7	+20	+0.4	+0.0	+0.0	+0.1	+0.3	-0.03	+490	+475

Traits observed: GL CE BWT

Seller's remarks / Verkoper se kommentaar:

R _____

LOT NR 17				
Verkoper	**Beskrywing**	**Aantal**	**Koper**	**Prys**
Stansim Simmentalers	Simmentaler Koei Oop SP	1		

***CSS 22352**

OFFICIAL RECORD / AMPTELIKE REKORD
Outeniqua Interrasveiling, 18/10/2024

STANSIM MERCY — CSS22352 — Lot.17

STANSIM SIMMENTALERS, POSBUS 1581 FAERIE GLEN 0043 TEL:27827770250 — **SIMMENTALER**

Birth Date: 03/09/2022 **Simdex:** **Star:** **Reg. Status:** CBK **FEMALE/VROULIK**
Age: 25 months **Days last calved:** **ICP:** Not yet inspected
Herdbook: SP **Calvings:** **Reg. No:** 103664876
Horn: Polled **Calving dates:** 03/08/2024

SIRE / VAAR:
- $50854405 FGAF SELDOM 835L
- +P748277 FGAF GUERRERO 810Y
  - $50854410 NOSSATERRA REAL WISH 69U
- **CSS19975 STANSIM QUEBEC** Polled
  - SDJ0886 AI-AI SAREL Horned
  - CSS13213 STANSIM SANTJIES ** Polled
    - WM0526 WYMAR BLOSSOM (P) Polled

DAM / MOER:
- AB1110 RIVERVALLEY HOUSTON Horned
- CSS1515 STANSIM BIGMAC Horned
  - IP0643 NAWINA KARLA
- **CSS19812 STANSIM BISAN** Horned
  Simdex: 68 Calving dates: 25/07/2024 03/09/2022
  ICP: 691
  - SDJ0886 AI-AI SAREL Horned
  - CSS13213 STANSIM SANTJIES ** Polled
    - WM0526 WYMAR BLOSSOM (P) Polled

August 2024 South African Simmentaler BREEDPLAN — *Simmentaler SA-- www.simmentaler.org*

2024	CED	CEM	BW	200	400	600	MCW	MILK	SC	DC	CWT	EMA	Rib	Rump	IMF%	RBY%	NFI P	SBI (R)	SPI (R)
EBV	**+4.6**	**+3.4**	**-0.2**	**+18**	**+28**	**+31**	**+28**	**+6**	**+0.9**	**--**	**+18**	**--**	**--**	**--**	**--**	**--**	**--**	**+508**	**+529**
ACC	*35%*	*27%*	*67%*	*44%*	*43%*	*45%*	*44%*	*29%*	*35%*		*33%*								
BREED	+0.3	+0.6	+1.6	+17	+28	+34	+36	+5	+0.3	-0.7	+20	+0.4	+0.0	+0.0	+0.1	+0.3	-0.03	+490	+475

Traits observed: CE BWT

Seller's remarks / Verkoper se kommentaar:
Oop

R _____

LOT NR 18				
Verkoper	**Beskrywing**	**Aantal**	**Koper**	**Prys**
Stansim Simmentalers	Simmentaler Koei Oop SP	1		

***CSS 21212**

STANSIM SPIEKSIE (AI) — CSS21212 — Lot. 18

STANSIM SIMMENTALERS, POSBUS 1581 FAERIE GLEN 0043 TEL:27827770250 — **SIMMENTALER**

Birth Date: 21/12/2021 **Simdex:** 98, **Star:** **Reg. Status:** REG **FEMALE/VROULIK**
Age: 33 months **Days last calved:** 102 **ICP:** **Inspection Date:** 14/11/2023
Herdbook: SP **Calvings:** 1 **Reg. No:** 103568705
Horn: Horned **Calving dates:** 08/07/2024

OFFICIAL RECORD / AMPTELIKE REKORD
Outeniqua Interrasveiling, 18/10/2024

SIRE / VAAR:
- JE12236 OMRUIL JE236
  - SPBPB028 BRENAIR PARK HAFKE [ET]
  - PA0432 PCK DALMIA
- **JPD1919 DE VIL SPIEKKERIES**
  - JPD096 DE VIL SANDTA 2DE Horned
    - JPD0612 DE VIL MALGAS
    - JPD0215 DE VIL SANTA

DAM / MOER:
- **CSS1763 STANSIM ROOIJANSIE** Polled
  Simdex: 87 ICP: 428 Calving dates: 06/11/2022 21/12/2021 04/07/2020
  - CSS1247 STANSIM ROOILEEU Horned
    - PN07147 LEEUPOORT BRITS Horned
    - CSS083 STANSIM SIMONE Horned
  - CSS13218 STANSIM TOPLIZ Polled
    - CSS09144 STANSIM JAN SAK Polled
    - CSS0983 STANSIM BAKENROCKET Polled

August 2024 South African Simmentaler BREEDPLAN — *Simmentaler SA-- www.simmentaler.org*

2024	CED	CEM	BW	200	400	600	MCW	MILK	SC	DC	CWT	EMA	Rib	Rump	IMF%	RBY%	NFI P	SBI (R)	SPI (R)
EBV	**-1.5**	**-0.2**	**+2.6**	**+13**	**+15**	**+21**	**+21**	**+4**	**--**	**--**	**+12**	**--**	**--**	**--**	**--**	**--**	**--**	**+343**	**+363**
ACC	*32%*	*25%*	*66%*	*44%*	*44%*	*46%*	*44%*	*26%*			*33%*								
BREED	+0.3	+0.6	+1.6	+17	+28	+34	+36	+5	+0.3	-0.7	+20	+0.4	+0.0	+0.0	+0.1	+0.3	-0.03	+490	+475

Traits observed: CE BWT

Seller's remarks / Verkoper se kommentaar:
Oop

R _____

LOT NR 19				
Verkoper	**Beskrywing**	**Aantal**	**Koper**	**Prys**
Stansim Simmentalers	Simmentaler Koei SP met verskalf	1+1		

***CSS 21216**

STANSIM ANTONETTE (AI) (ET) — CSS21216 — Lot. 19

STANSIM SIMMENTALERS, POSBUS 1581 FAERIE GLEN 0043 TEL:27827770250 — **SIMMENTALER**

Birth Date: 29/12/2021 **Simdex:** 93, **Star:** **Reg. Status:** REG **FEMALE/VROULIK**
Age: 33 months **Days last calved:** 49 **ICP:** **Inspection Date:** 14/11/2023
Herdbook: SP **Calvings:** 1 **Reg. No:** 103628541
Horn: Horned **Calving dates:** 30/08/2024

OFFICIAL RECORD / AMPTELIKE REKORD
Outeniqua Interrasveiling, 18/10/2024

SIRE / VAAR:
- DJA094 ELLI'S ENDRICUS (ET) Polled
  - UG0481 SALERIKA EKSELLENT Polled
  - E9973 ERICO DERBAL ***
- **BMB1326 BOTHASIM KENSINGTON** Polled
  - KS0587 KYKSIM KAAG ***
    - KS02104 KYKSIM KAAN
    - KS0383 KYKSIM KS0383

DAM / MOER:
- **NV0810 VON-ADEL ANJINA** Horned
  Simdex: 89 ICP: 432 Calving dates: 17/01/2024 16/01/2024 14/01/2024 10/01/2024 02/01/2024 26/07/2022 30/12/2021 29/12/2021 28/12/2021 26/12/2021 05/06/2020 28/05/2020 15/02/2020 26/12/2019 08/09/2019 02/10/2018 14/09/2017 30/09/2016 06/09/2015 04/10/2014
  - E04105 ERICO NAPOLEON
    - E0253 ERICO DERLEON
    - E0290 ERICO CHEMSTY
  - NV047 VON-ADEL ANJI ***
    - CMO8740 RU-DEV JIM
    - CE99159 SIMLEE ANPED ***

August 2024 South African Simmentaler BREEDPLAN — *Simmentaler SA-- www.simmentaler.org*

2024	CED	CEM	BW	200	400	600	MCW	MILK	SC	DC	CWT	EMA	Rib	Rump	IMF%	RBY%	NFI P	SBI (R)	SPI (R)
EBV	**-0.8**	**+2.6**	**+0.6**	**+15**	**+20**	**+26**	**+30**	**+6**	**-0.3**	**+0.1**	**+13**	**-0.6**	**-0.2**	**-0.1**	**+0.1**	**-0.1**	**--**	**+349**	**+394**
ACC	*44%*	*39%*	*66%*	*53%*	*49%*	*50%*	*49%*	*47%*	*34%*	*26%*	*41%*	*25%*	*28%*	*28%*	*26%*	*28%*			
BREED	+0.3	+0.6	+1.6	+17	+28	+34	+36	+5	+0.3	-0.7	+20	+0.4	+0.0	+0.0	+0.1	+0.3	-0.03	+490	+475

Traits observed: BWT

Seller's remarks / Verkoper se kommentaar:
Met 'n verskalf

R _____

LOT NR 20				
Verkoper	**Beskrywing**	**Aantal**	**Koper**	**Prys**
Stansim Simmentalers	Simmentaler Koei Oop SP	1		

***PN 14328**

LEEUPOORT PN14328 — PN14328 — Lot. 20

STANSIM SIMMENTALERS, POSBUS 1581 FAERIE GLEN 0043 TEL:27827770250 — **SIMMENTALER**

Birth Date: 21/08/2014 **Simdex:** 89, **Star:** **Reg. Status:** REG **FEMALE/VROULIK**
Age: 121 months **Days last calved:** 278 **ICP:** 436 **Inspection Date:** 31/08/2018
Herdbook: SP **Calvings:** 7 **Reg. No:** 102821253
Horn: **Calving dates:** 14/01/2024 11/11/2022 01/11/2021 03/04/2020 01/04/2019 15/05/2018 16/11/2016

OFFICIAL RECORD / AMPTELIKE REKORD
Outeniqua Interrasveiling, 18/10/2024

SIRE / VAAR:
- LAT0033 LATCO GOLD II
- JJM0562 JASTLEM NAAS
- JJM9917 JASTLEM NADIA 1STE
- **JS1023 SIMBERG BALAN** Horned
- KS028 KYKSIM BANOL
- KS0560 KYKSIM ANBAL
- MS99191 KYKSO ANHAMI

DAM / MOER:
- PN9795 LEEUPOORT ULI
- AGO00147 ODENSIM ODENDAAL P Polled
- IH8993 BOOMSKRAAP OLGA 8993 P ** Polled
- **UG03118 SALERIKA 03118 ***** Polled
  Simdex: 106 ICP: 356 — Calving dates: 21/08/2014 24/08/2013 29/09/2012 31/07/2011 02/09/2010 12/09/2009 16/09/2008 24/09/2007 23/10/2006 14/11/2005
- CA391601 RICHWOOD BRUNO 809G (P) Polled
- UG0176 SALERIKA REDE Polled
- 4556 REDE ***

August 2024 South African Simmentaler BREEDPLAN — *Simmentaler SA-- www.simmentaler.org*

2024	CED	CEM	BW	200	400	600	MCW	MILK	SC	DC	CWT	EMA	Rib	Rump	IMF%	RBY%	NFI P	SBI (R)	SPI (R)
EBV	**+1.8**	**-0.5**	**+1.3**	**+18**	**+35**	**+48**	**+44**	**+5**	**-0.3**	**-0.4**	**+28**	**--**	**-0.3**	**-0.3**	**+0.1**	**+0.9**	**--**	**+555**	**+523**
ACC	*44%*	*35%*	*78%*	*64%*	*60%*	*61%*	*60%*	*49%*	*27%*	*26%*	*46%*		*29%*	*29%*	*25%*	*29%*			
BREED	+0.3	+0.6	+1.6	+17	+28	+34	+36	+5	+0.3	-0.7	+20	+0.4	+0.0	+0.0	+0.1	+0.3	-0.03	+490	+475

Traits observed: BWT 200WT

Seller's remarks / Verkoper se kommentaar:
Oop

R _____

LOT NR 21				
Verkoper	**Beskrywing**	**Aantal**	**Koper**	**Prys**
Stansim Simmentalers	Simmentaler Koei SP met bulkalf	1+1		

***CSS 2172**

STANSIM COLSIE — CSS2172 — Lot. 21

STANSIM SIMMENTALERS, POSBUS 1581 FAERIE GLEN 0043 TEL:27827770250 — **SIMMENTALER**

Birth Date: 16/10/2021 **Simdex:** 88 **Star:** **Reg. Status:** CBK **FEMALE/VROULIK**
Age: 36 months **Days last calved:** 66 **ICP:** Not yet inspected
Herdbook: SP **Calvings:** 1 **Reg. No:** 103534624
Horn: Polled **Calving dates:** 03/08/2024

OFFICIAL RECORD / AMPTELIKE REKORD
Outeniqua Interrasveiling, 18/10/2024

SIRE / VAAR:
- CE0844 SIMLEE ESAU Polled
- AGO1268 ODENSIM EZAU 3 Polled
- AGO0486 ODENSIM JUCHAMA ***
- **WEL15123 ANSIESKRAAL EMBO15** Polled
- WEL056 ANSIESKRAAL DA GAMA
- WEL0840 ANSIESKRAAL TENICIA Horned
- WEL0354 ANSIESKRAAL TRYNA Polled

DAM / MOER:
- 38088954 DONNERHALL
- KK1250 KRANSKOP DUBE Disbudded
- WEH0118 DORSIM FINI ***
- **WEL1648 ANSIESKRAAL LIENKA161** Polled
  Simdex: 78 ICP: 424 — Calving dates: 16/10/2021 22/08/2020 21/06/2019
- 918147956 ZIMBO (P) Polled
- WEL0662 ANSIESKRAAL LIENKA Horned
- WEL0215 ANSIESKRAAL LAURIKA

August 2024 South African Simmentaler BREEDPLAN — *Simmentaler SA-- www.simmentaler.org*

2024	CED	CEM	BW	200	400	600	MCW	MILK	SC	DC	CWT	EMA	Rib	Rump	IMF%	RBY%	NFI P	SBI (R)	SPI (R)
EBV	**-2.8**	**+0.9**	**+1.9**	**+19**	**+29**	**+37**	**+36**	**+7**	**+0.2**	**--**	**+20**	**--**	**--**	**--**	**--**	**--**	**--**	**+342**	**+387**
ACC	*43%*	*36%*	*69%*	*40%*	*39%*	*43%*	*43%*	*32%*	*26%*		*32%*								
BREED	+0.3	+0.6	+1.6	+17	+28	+34	+36	+5	+0.3	-0.7	+20	+0.4	+0.0	+0.0	+0.1	+0.3	-0.03	+490	+475

Traits observed: CE BWT

Seller's remarks / Verkoper se kommentaar:
Met n bulkalf

R _____

LOT NR 22				
Verkoper	**Beskrywing**	**Aantal**	**Koper**	**Prys**
Stansim Simmentalers	Simmentaler Koei Oop SP	1		

***CSS 22365**

STANSIM GOLDIE — CSS22365 — Lot. 22

STANSIM SIMMENTALERS, POSBUS 1581 FAERIE GLEN 0043 TEL:27827770250 — **SIMMENTALER**

OFFICIAL RECORD / AMPTELIKE REKORD
Outeniqua Interrasveiling, 18/10/2024

Birth Date: 29/09/2022 **Simdex:** **Star:** **Reg. Status:** CBK **FEMALE/VROULIK**
Age: 24 months **Days last calved:** **ICP:** Not yet inspected
Herdbook: SP **Calvings:** **Reg. No:** 103664991
Horn: Polled **Calving dates:**

SIRE / VAAR:
- UG07186 SALERIKA KAROB (P) Polled
- UG11209 SALERIKA BRAVO Disbudded
- UG07191 SALERIKA UG07191 B ** Disbudded
- **CSS18568 STANSIM GOLD DOLLAR** Horned
  - KS02100 KYKSIM HONEYMOON Polled
  - CSS0970 STANSIM HONEYANHAB *** Polled
  - KS0354 KYKSIM ANHAB

DAM / MOER:
- +P735154 IPU NERO 274X
- 790720 RENDEZVOUS GALBA 60A
- +P703846 RENDEZVOUS 60U
- **CSS18562 STANSIM SANTA** Polled
  Simdex: 88 Calving dates: 06/10/2023 29/09/2022 04/06/2021
  ICP: 427
  - KS02100 KYKSIM HONEYMOON Polled
  - CSS0970 STANSIM HONEYANHAB *** Polled
  - KS0354 KYKSIM ANHAB

August 2024 South African Simmentaler BREEDPLAN — *Simmentaler SA-- www.simmentaler.org*

2024	CED	CEM	BW	200	400	600	MCW	MILK	SC	DC	CWT	EMA	Rib	Rump	IMF%	RBY%	NFI P	SBI (R)	SPI (R)
EBV	**+0.9**	**+0.0**	**+0.6**	**+16**	**+25**	**+24**	**+31**	**-1**	**-0.6**	**--**	**+16**	**--**	**-0.3**	**-0.3**	**--**	**+0.1**	**--**	**+541**	**+500**
ACC	*39%*	*33%*	*70%*	*46%*	*46%*	*47%*	*47%*	*36%*	*33%*		*37%*		*25%*	*25%*		*25%*			
BREED	+0.3	+0.6	+1.6	+17	+28	+34	+36	+5	+0.3	-0.7	+20	+0.4	+0.0	+0.0	+0.1	+0.3	-0.03	+490	+475

Traits observed: CE BWT

Seller's remarks / Verkoper se kommentaar:
Oop

R _____

LOT NR 23				
Verkoper	**Beskrywing**	**Aantal**	**Koper**	**Prys**
Stansim Simmentalers	Simmentaler Koei SP met bulkalf	1+1		

***CSS 21203**

STANSIM ANSIE (AI) (ET) — CSS21203 — Lot. 23

STANSIM SIMMENTALERS, POSBUS 1581 FAERIE GLEN 0043 TEL:27827770250 — **SIMMENTALER**

OFFICIAL RECORD / AMPTELIKE REKORD
Outeniqua Interrasveiling, 18/10/2024

Birth Date: 26/12/2021 **Simdex:** 106, **Star:** **Reg. Status:** REG **FEMALE/VROULIK**
Age: 33 months **Days last calved:** 166 **ICP:** **Inspection Date:** 14/11/2023
Herdbook: SP **Calvings:** 1 **Reg. No:** 103628483
Horn: Horned **Calving dates:** 05/05/2024

SIRE / VAAR:
- UG0481 SALERIKA EKSELLENT Polled
- DJA094 ELLI'S ENDRICUS (ET) Polled
- E9973 ERICO DERBAL ***
- **BMB1326 BOTHASIM KENSINGTON** Polled
  - KS02104 KYKSIM KAAN
  - KS0587 KYKSIM KAAG ***
  - KS0383 KYKSIM KS0383

DAM / MOER:
- E0253 ERICO DERLEON
- E04105 ERICO NAPOLEON
- E0290 ERICO CHEMSTY
- **NV0810 VON-ADEL ANJINA** Horned
  Simdex: 89 Calving dates: 17/01/2024 16/01/2024 14/01/2024 10/01/2024
  ICP: 432 02/01/2024 26/07/2022 30/12/2021 29/12/2021 28/12/2021
  26/12/2021 05/06/2020 28/05/2020 15/02/2020 26/12/2019
  08/09/2019 02/10/2018 14/09/2017 30/09/2016 06/09/2015
  04/10/2014
  - CMO8740 RU-DEV JIM
  - NV047 VON-ADEL ANJI ***
  - CE99159 SIMLEE ANPED ***

August 2024 South African Simmentaler BREEDPLAN — *Simmentaler SA-- www.simmentaler.org*

2024	CED	CEM	BW	200	400	600	MCW	MILK	SC	DC	CWT	EMA	Rib	Rump	IMF%	RBY%	NFI P	SBI (R)	SPI (R)
EBV	**-0.8**	**+2.6**	**+0.6**	**+15**	**+20**	**+26**	**+30**	**+6**	**-0.3**	**+0.1**	**+13**	**-0.6**	**-0.2**	**-0.1**	**+0.1**	**-0.1**	**--**	**+349**	**+394**
ACC	*44%*	*39%*	*66%*	*53%*	*49%*	*50%*	*49%*	*47%*	*34%*	*26%*	*41%*	*25%*	*28%*	*28%*	*26%*	*28%*			
BREED	+0.3	+0.6	+1.6	+17	+28	+34	+36	+5	+0.3	-0.7	+20	+0.4	+0.0	+0.0	+0.1	+0.3	-0.03	+490	+475

Traits observed: BWT

Seller's remarks / Verkoper se kommentaar:
Met 'n bulkalf

R _____

LOT NR 24				
Verkoper	**Beskrywing**	**Aantal**	**Koper**	**Prys**
Stansim Simmentalers	Simmentaler Koei Oop SP	1		

***CSS 2138**

OFFICIAL RECORD / AMPTELIKE REKORD
Outeniqua Interrasveiling, 18/10/2024

STANSIM SAMMY — CSS2138 — Lot. 24

STANSIM SIMMENTALERS, POSBUS 1581 FAERIE GLEN 0043 TEL:27827770250 — **SIMMENTALER**

Birth Date: 26/07/2021 **Simdex:** , **Star:** **Reg. Status:** REG **FEMALE/VROULIK**
Age: 38 months **Days last calved:** **ICP:** **Inspection Date:** 19/10/2022
Herdbook: SP **Calvings:** **Reg. No:** 103515201
Horn: Horned **Calving dates:** 15/01/2023

SIRE / VAAR:
- PN07147 LEEUPOORT BRITS Horned
- CSS1247 STANSIM ROOILEEU Horned
  - CSS083 STANSIM SIMONE Horned
- **CSS19901 STANSIM JIMMY** Horned
  - SER083 SERSIM MAROELA Horned
- CSS14495 STANSIM ANNIE Polled
  - CSS10225 STANSIM QUEENIE Polled

DAM / MOER:
- UG07186 SALERIKA KAROB (P) Polled
- UG11209 SALERIKA BRAVO Disbudded
  - UG07191 SALERIKA UG07191 B ** Disbudded
- **CSS18564 STANSIM JOSIE** Horned
  Simdex: 85 Calving dates: 15/11/2023 22/11/2022 26/07/2021
  ICP: 421
- LAT021 LATCO HAGER JUNIOR
- MAJ06104 INALLERWELT JODY
  - MAJ0112 INALLERWELT ENA 3DE

August 2024 South African Simmentaler BREEDPLAN — *Simmentaler SA-- www.simmentaler.org*

2024	CED	CEM	BW	200	400	600	MCW	MILK	SC	DC	CWT	EMA	Rib	Rump	IMF%	RBY%	NFI P	SBI (R)	SPI (R)
EBV	**-4.2**	**-1.3**	**+2.8**	**+18**	**+30**	**+36**	**+44**	**+1**	**+0.9**	**--**	**+20**	**--**	**-0.3**	**-0.3**	**--**	**+0.2**	**--**	**+488**	**+452**
ACC	*35%*	*30%*	*63%*	*42%*	*41%*	*43%*	*43%*	*34%*	*31%*		*34%*		*26%*	*26%*		*26%*			
BREED	+0.3	+0.6	+1.6	+17	+28	+34	+36	+5	+0.3	-0.7	+20	+0.4	+0.0	+0.0	+0.1	+0.3	-0.03	+490	+475

Traits observed: CE BWT

Seller's remarks / Verkoper se kommentaar:

R _____

LOT NR 25				
Verkoper	**Beskrywing**	**Aantal**	**Koper**	**Prys**
Stansim Simmentalers	Simmentaler Vers Oop SP (loop by bul)	1		

***CSS 21206**

OFFICIAL RECORD / AMPTELIKE REKORD
Outeniqua Interrasveiling, 18/10/2024

STANSIM ANITA (AI) (ET) — CSS21206 — Lot. 25

STANSIM SIMMENTALERS, POSBUS 1581 FAERIE GLEN 0043 TEL:27827770250 — **SIMMENTALER**

Birth Date: 28/12/2021 **Simdex:** 109, **Star:** **Reg. Status:** REG **FEMALE/VROULIK**
Age: 33 months **Days last calved:** 195 **ICP:** **Inspection Date:** 14/11/2023
Herdbook: SP **Calvings:** 1 **Reg. No:** 103628491
Horn: Polled **Calving dates:** 06/04/2024

SIRE / VAAR:
- UG0481 SALERIKA EKSELLENT Polled
- DJA094 ELLI'S ENDRICUS (ET) Polled
  - E9973 ERICO DERBAL ***
- **BMB1326 BOTHASIM KENSINGTON** Polled
  - KS02104 KYKSIM KAAN
- KS0587 KYKSIM KAAG ***
  - KS0383 KYKSIM KS0383

DAM / MOER:
- E0253 ERICO DERLEON
- E04105 ERICO NAPOLEON
  - E0290 ERICO CHEMSTY
- **NV0810 VON-ADEL ANJINA** Horned
  Simdex: 89 Calving dates: 17/01/2024 16/01/2024 14/01/2024 10/01/2024 02/01/2024 26/07/2022 30/12/2021 29/12/2021 28/12/2021 26/12/2021 05/06/2020 28/05/2020 15/02/2020 26/12/2019 08/09/2019 02/10/2018 14/09/2017 30/09/2016 06/09/2015 04/10/2014
  ICP: 432
- CMO8740 RU-DEV JIM
- NV047 VON-ADEL ANJI ***
  - CE99159 SIMLEE ANPED ***

August 2024 South African Simmentaler BREEDPLAN — *Simmentaler SA-- www.simmentaler.org*

2024	CED	CEM	BW	200	400	600	MCW	MILK	SC	DC	CWT	EMA	Rib	Rump	IMF%	RBY%	NFI P	SBI (R)	SPI (R)
EBV	**-0.8**	**+2.6**	**+0.6**	**+15**	**+20**	**+26**	**+30**	**+6**	**-0.3**	**+0.1**	**+13**	**-0.6**	**-0.2**	**-0.1**	**+0.1**	**-0.1**	**--**	**+349**	**+394**
ACC	*44%*	*39%*	*59%*	*51%*	*48%*	*49%*	*47%*	*47%*	*34%*	*26%*	*40%*	*25%*	*28%*	*28%*	*26%*	*28%*			
BREED	+0.3	+0.6	+1.6	+17	+28	+34	+36	+5	+0.3	-0.7	+20	+0.4	+0.0	+0.0	+0.1	+0.3	-0.03	+490	+475

Traits observed: BWT

Seller's remarks / Verkoper se kommentaar:
Oop vers, loop by bul

R _____

LOT NR 26				
Verkoper	**Beskrywing**	**Aantal**	**Koper**	**Prys**
Stansim Simmentalers	Simmentaler Vers Oop SP (loop by bul)	1		

***CSS 22332**

STANSIM OLLIE (AI) (ET) — CSS22332 — Lot. 26

STANSIM SIMMENTALERS, POSBUS 1581 FAERIE GLEN 0043 TEL:27827770250 — **SIMMENTALER**

Birth Date: 17/07/2022 **Simdex:** , **Star:** **Reg. Status:** REG **FEMALE/VROULIK**
Age: 27 months **Days last calved:** **ICP:** **Inspection Date:** 14/11/2023
Herdbook: SP **Calvings:** **Reg. No:** 103628293
Horn: Horned **Calving dates:**

SIRE / VAAR:
- CE0844 SIMLEE ESAU Polled
- AGO1268 ODENSIM EZAU 3 Polled
- AGO0486 ODENSIM JUCHAMA ***
- **VLB15219 VLENSBURG LOTTO 15219** Polled
  - IP0543 NAWINA ELS 4DE (P) Polled
  - VLB0936 VLENSBURG LOTTE 0936 P Polled
  - VLB0671 VLENSBURG LORCA 0671 P Polled

DAM / MOER:
- +T391534 GIDSCO APPOLLO 3F
- 591250 R FIVE MALTESE
- +T538963 FGAF SHES ALL THAT 724K
- **JVL1118 LEWENSLUS ANITA** ** Horned
  - Simdex: 100 ICP: 382
  - Calving dates: 05/08/2022 17/07/2022 12/02/2022 10/04/2021 10/02/2020 01/11/2018 04/01/2018 06/01/2017 08/02/2016 13/01/2015 05/10/2013
- JVL0138 LEWENSLUS PENBEWARD
- JVL0611 LEWENSLUS AMBED 2E *
- JVL9918 LEWENSLUS AMBED

August 2024 South African Simmentaler BREEDPLAN — *Simmentaler SA-- www.simmentaler.org*

2024	CED	CEM	BW	200	400	600	MCW	MILK	SC	DC	CWT	EMA	Rib	Rump	IMF%	RBY%	NFI P	SBI (R)	SPI (R)
EBV	-8.3	-2.8	+2.4	+22	+39	+50	+52	+3	+0.8	--	+29	+1.0	+0.1	+0.2	+0.3	+0.3	--	+404	+402
ACC	*42%*	*37%*	*60%*	*53%*	*53%*	*53%*	*51%*	*45%*	*39%*		*42%*	*27%*	*29%*	*29%*	*25%*	*29%*			
BREED	+0.3	+0.6	+1.6	+17	+28	+34	+36	+5	+0.3	-0.7	+20	+0.4	+0.0	+0.0	+0.1	+0.3	-0.03	+490	+475

Traits observed: BWT

Seller's remarks / Verkoper se kommentaar:
Oop vers, loop by bul

R _____

OFFICIAL RECORD / AMPTELIKE REKORD
Outeniqua Interrasveiling, 18/10/2024

LOT NR 27				
Verkoper	**Beskrywing**	**Aantal**	**Koper**	**Prys**
Stansim Simmentalers	Simmentaler Vers Oop SP (loop by bul)	1		

***CSS 23120**

STANSIM MARIE (AI) — CSS23120 — Lot. 27

STANSIM SIMMENTALERS, POSBUS 1581 FAERIE GLEN 0043 TEL:27827770250 — **SIMMENTALER**

Birth Date: 04/07/2023 **Simdex:** , **Star:** **Reg. Status:** CBK **FEMALE/VROULIK**
Age: 15 months **Days last calved:** **ICP:** Not yet inspected
Herdbook: SP **Calvings:** **Reg. No:** 103778437
Horn: Polled **Calving dates:**

SIRE / VAAR:
- SPBPB028 BRENAIR PARK HAFKE [ET]
- JE12236 OMRUIL JE236
- PA0432 PCK DALMIA
- **JPD1954 DE VIL MATTIE** Polled
  - MMA139 GRASLAAGTE RAMBO Horned
  - JPD17181 DE VIL MAKKIE Polled
  - JPD0913 DE VIL MARIE Horned

DAM / MOER:
- UG02113 SALERIKA ZENO PP
- UG069 SALERIKA MALLICK (P) Polled
- UG044 SALERIKA UG044 *** Polled
- **CCE1313 VERA ROLIE** Polled
  - Simdex: 92 ICP: 428
  - Calving dates: 04/07/2023 21/03/2022 22/01/2022 15/01/2022 31/12/2021 18/09/2020 02/09/2020 07/04/2019 28/02/2018 04/03/2017 31/03/2016 26/04/2015
- CMO0452 RU-DEV NIEL
- CCE0846 VERA RONIE *** Horned
- CCE063 VERA ROPA Horned

August 2024 South African Simmentaler BREEDPLAN — *Simmentaler SA-- www.simmentaler.org*

2024	CED	CEM	BW	200	400	600	MCW	MILK	SC	DC	CWT	EMA	Rib	Rump	IMF%	RBY%	NFI P	SBI (R)	SPI (R)
EBV	+2.5	+0.0	+1.7	+23	+39	+49	+49	+6	+0.4	--	+29	--	-0.4	-0.4	--	+0.7	--	+517	+518
ACC	*36%*	*28%*	*69%*	*50%*	*49%*	*49%*	*47%*	*32%*	*37%*		*37%*		*27%*	*27%*		*27%*			
BREED	+0.3	+0.6	+1.6	+17	+28	+34	+36	+5	+0.3	-0.7	+20	+0.4	+0.0	+0.0	+0.1	+0.3	-0.03	+490	+475

Traits observed: BWT

Seller's remarks / Verkoper se kommentaar:
Oop vers, loop by bul

R _____

OFFICIAL RECORD / AMPTELIKE REKORD
Outeniqua Interrasveiling, 18/10/2024

LOT NR 28				
Verkoper	**Beskrywing**	**Aantal**	**Koper**	**Prys**
Stansim Simmentalers	Simmentaler Vers Oop SP (loop by bul)	1		

***CSS 22355**

OFFICIAL RECORD / AMPTELIKE REKORD
Outeniqua Interrasveiling, 18/10/2024

STANSIM QUICE — CSS22355 — Lot. 28

STANSIM SIMMENTALERS, POSBUS 1581 FAERIE GLEN 0043 TEL:27827770250 — **SIMMENTALER**

Birth Date: 03/09/2022 **Simdex:** **Star:** **Reg. Status:** CBK **FEMALE/VROULIK**
Age: 25 months **Days last calved:** **ICP:** Not yet inspected
Herdbook: SP **Calvings:** **Reg. No:** 103664892
Horn: Polled **Calving dates:**

SIRE / VAAR:
- $50854405 FGAF SELDOM 835L
- +P748277 FGAF GUERRERO 810Y
  - $50854410 NOSSATERRA REAL WISH 69U
- **CSS19975 STANSIM QUEBEC** Polled
  - SDJ0886 AI-AI SAREL Horned
  - CSS13213 STANSIM SANTJIES ** Polled
  - WM0526 WYMAR BLOSSOM (P) Polled

DAM / MOER:
- KS1049 KYKSIM ANPE Polled
- KS141 KYKSIM ANDERBOS Horned
  - KS1137 KYKSIM GERBOS Horned
- **CSS19993 STANSIM OLI** Polled
  Simdex: 64 Calving dates: 29/08/2024 03/09/2022
  ICP: 726
- UG1371 SALERIKA UG1371 B Polled
- JVL1624 LEWENSLUS PEMHEI 4DE Polled
  - JVL0815 LEWENSLUS PEMHEI Horned

August 2024 South African Simmentaler BREEDPLAN — *Simmentaler SA-- www.simmentaler.org*

2024	CED	CEM	BW	200	400	600	MCW	MILK	SC	DC	CWT	EMA	Rib	Rump	IMF%	RBY%	NFI P	SBI (R)	SPI (R)
EBV	**+6.4**	**--**	**+0.0**	**+16**	**+25**	**+27**	**+22**	**+5**	**+0.7**	**--**	**+15**	**--**	**--**	**--**	**--**	**--**	**--**	**+561**	**+554**
ACC	*30%*		*65%*	*40%*	*39%*	*41%*	*40%*	*26%*	*31%*		*30%*								
BREED	+0.3	+0.6	+1.6	+17	+28	+34	+36	+5	+0.3	-0.7	+20	+0.4	+0.0	+0.0	+0.1	+0.3	-0.03	+490	+475

Traits observed: CE BWT

Seller's remarks / Verkoper se kommentaar:
Oop vers, loop by bul

R _____

LOT NR 29				
Verkoper	**Beskrywing**	**Aantal**	**Koper**	**Prys**
Prospect	Rooi Angus Bul Kommersieël	1		

***CHG 23-01**

LOT NR 30				
Verkoper	**Beskrywing**	**Aantal**	**Koper**	**Prys**
Prospect	Rooi Angus Bul Kommersieël	1		

***CHG 23-02**

LOT NR 31				
Verkoper	**Beskrywing**	**Aantal**	**Koper**	**Prys**
Prospect	Rooi Angus Bul Kommersieël	1		

***CHG 23-03**

LOT NR 33				
Verkoper	**Beskrywing**	**Aantal**	**Koper**	**Prys**
Hanri van Deventer	Boran Bul SP	1		

***19 Money**

***Gebore: 06/07/22**

***Moeder: Frieda (RKM 1803) & Vaar: LJB 1767**

Inentings: Multimin, Attila

SA STAMBOEK STUD BOOK

Extended Pedigree Certificate

compiled by S.A. Stud Book and Animal Improvement Association

BORAN

BREED: BORAN

NAME: LJB LJB 170067 **D.O.B.** 2017/11/16 **STATUS:** CAN
REGNO: 0086423910 **SEX:** MALE **HERDBOOK SECTION:** SP
IDNO: BORMLJB 170067 **LABNO:** -

OWNER: - **ADDRESS:** -

BREEDER: MNR. L.J.B. ROSSOUW **ADDRESS:** MNR. L.J.B. ROSSOUW, TAMBOTIERAND, ALMA, MODIMOLLE, 0510

NAME: LJB LJB 170067
REGNO: 0086423910
IDNO. BORMLJB 170067
D.O.B. 2017/11/16
SECTION : SP
LABNO : - INB : 4%
HORNPOLL :

S — ADELSON ACHILLES
IDNo.: BORMEG 090026
Regno.: 0070766753
Section: SP
Labno.: AS007853 INB: 0%
Hornpoll:

SS — BORGEN B 05 74
IDNo.: BORMB 050074
Regno.: 0063023873
Section: SP
Labno.: AS003348 INB: 0%
Hornpoll:

SSS — MOGWOONI 3094 (8MK163)
IDNo.: K6K3094
Regno.: 0049787153
Section: SP
Labno.: P3544/03 INB: 0%
Hornpoll:

SSSS — OL PEJETA KPO414
IDNo.: KPO414 Hornpoll
Regno.: 0049653587 INB: 0%

SSSD — 2001
IDNo.: K6K2001 Hornpoll
Regno.: 0049787161 INB: 0%

SSD — MOGWOONI 2228
IDNo.: K6K2228
Regno.: 0049784440
Section: SP
Labno.: P4809/02 INB: 0%
Hornpoll:

SSDS — 1327
IDNo.: 1327 Hornpoll
Regno.: 0049784465 INB: 0%

SSDD — 1730
IDNo.: 1730 Hornpoll
Regno.: 0049784457 INB: 0%

SD — ADELSON EG 04 03 OUSUS
IDNo.: BORFEG 040003
Regno.: 0062664503
Section: SP
Labno.: U016209 INB: 6%
Hornpoll:

SDS — OUTSPAN HVT970017
IDNo.: BORMHVT 970017
Regno.: 0041934076
Section: SP
Labno.: U47341 INB: 0%
Hornpoll:

SDSS — SEGERA 494
IDNo.: 6SEG096 Hornpoll
Regno.: 0034659748 INB: 0%

SDSD — OL PEJETA KPO303
IDNo.: KPO303 Hornpoll
Regno.: 0049784879 INB: 0%

SDD — HLANZENI Z 00 51 KOLJANDER
IDNo.: BORFZ 000510
Regno.: 0044735066
Section: SP
Labno.: X7483 INB: 0%
Hornpoll:

SDDS — HLANZENI Z950026
IDNo.: BORMZ 950026 Hornpoll
Regno.: 0035270206 INB: 0%

SDDD — HLANZENI Z 97 42
IDNo.: BORFZ 970042 Hornpoll
Regno.: 0039613195 INB: 13%

D — ADELSON EG 130045
IDNo.: BORFEG 130045
Regno.: 0079980637
Section: SP
Labno.: U220598 INB: 0%
Hornpoll:

DS — ADELSON KEISER 801
IDNo.: BORMEG 080001
Regno.: 0068132554
Section: SP
Labno.: U039736 INB: 0%
Hornpoll:

DSS — KETA TLM040507 - BUSTER
IDNo.: BORMTLM 040507
Regno.: 0062822002
Section: SP
Labno.: U25736 INB: 0%
Hornpoll: DH

DSSS — MOGWOONI K6K2459
IDNo.: K6K2459 Hornpoll
Regno.: 0049422686 INB: 0%

DSSD — OL PEJETA KPO 961
IDNo.: KPO961 Hornpoll
Regno.: 0061025185 INB: 0%

DSD — GRASMERE GF 159U
IDNo.: GF159U D
Regno.: 0062581608
Section: SP
Labno.: U34589 INB: 1%
Hornpoll:

DSDS — GRASMERE 135M
IDNo.: GF135M Hornpoll
Regno.: 0062131974 INB: 13%

DSDD — GRASMERE GF 74P
IDNo.: GF74P D Hornpoll
Regno.: 0062579792 INB: 0%

DD — ADELSON EG 05 06 BLOMME
IDNo.: BORFEG 050006
Regno.: 0062664586
Section: SP
Labno.: U16214 INB: 0%
Hornpoll:

DDS — OUTSPAN HVT950003
IDNo.: BORMHVT 950003
Regno.: 0038412441
Section: SP
Labno.: U15383 INB: 0%
Hornpoll:

DDSS — 1603
IDNo.: BP4570 Hornpoll
Regno.: 0034659847 INB: 0%

DDSD — 1946
IDNo.: 1946 Hornpoll
Regno.: 0034729822 INB: 0%

DDD — HLANZENI Z 00 51 KOLJANDER
IDNo.: BORFZ 000510
Regno.: 0044735066
Section: SP
Labno.: X7483 INB: 0%
Hornpoll:

DDDS — HLANZENI Z950026
IDNo.: BORMZ 950026 Hornpoll
Regno.: 0035270206 INB: 0%

DDDD — HLANZENI Z 97 42
IDNo.: BORFZ 970042 Hornpoll
Regno.: 0039613195 INB: 13%

Extended Pedigree Certi cate

compiled by S.A. Stud Book and Animal Improvement Association

BREED: BORAN

NAME: ROELEVELD FRIEDA **D.O.B.** 2018/04/23 **STATUS:** CAN
REGNO: 0086907698 **SEX:** FEMALE **HERDBOOK SECTION:** SP
IDNO: BORFRKM 180003 **LABNO:** -

OWNER: - **ADDRESS:** -

BREEDER: MNR. L. ROELEVELD **ADDRESS:** MNR. L. ROELEVELD, POSBUS 603, RIVERSDAL, 6670

NAME: ROELEVELD FRIEDA
REGNO: 0086907698
IDNO. BORFRKM 180003
D.O.B. 2018/04/23
SECTION : SP
LABNO : - **INB :** 1%
HORNPOLL :

S — NJABULO SULTAN
IDNo.: BORMWP 150015
Regno.: 0082124306
Section: SP
Labno.: U370980 INB: 0%
Hornpoll:

SS — CIRCLE C KAJAK
IDNo.: BORMCI 110129
Regno.: 0074259508
Section: SP
Labno.: AS010723 INB: 0%
Hornpoll:

SSS — CIRCLE C COJACK
IDNo.: BORMCI 080030
Regno.: 0066089541
Section: SP
Labno.: U328982 INB: 0%
Hornpoll:

SSSS — KETA TLM040507 - BUSTER
IDNo.: BORMTLM 040507 Hornpoll: DH
Regno.: 0062822002 INB: 0%

SSSD — GRASMERE GF 159U
IDNo.: GF159U D Hornpoll:
Regno.: 0062581608 INB: 1%

SSD — CIRCLE C ASTRID
IDNo.: BORFCI 090011
Regno.: 0068386101
Section: SP
Labno.: AS010626 INB: 0%
Hornpoll:

SSDS — KETA TLM050525 - INCREDIBULL
IDNo.: BORMTLM 050525 Hornpoll:
Regno.: 0062661434 INB: 0%

SSDD — KETA KB 20 A
IDNo.: KB20A Hornpoll: H
Regno.: 0062579909 INB: 0%

SD — CHAN-TE-MAR CTM12140
IDNo.: BORFCTM 120140
Regno.: 0077054476
Section: SP
Labno.: U151349 INB: 0%
Hornpoll:

SDS — KETA TLM 03 4 - MUSCLE KING
IDNo.: BORMTLM 030004
Regno.: 0061035523
Section: SP
Labno.: U105002 INB: 0%
Hornpoll:

SDSS — MOGWOONI K6K2588
IDNo.: K6K2588 Hornpoll:
Regno.: 0049653603 INB: 0%

SDSD — OL PEJETA 1680
IDNo.: KPO1680 Hornpoll:
Regno.: 0049786106 INB: 0%

SDD — ELANDSPRUIT SOCKS
IDNo.: BORFCFH 060697
Regno.: 0064482292
Section: SP
Labno.: U23509 INB: 0%
Hornpoll:

SDDS — KETA TLM020038
IDNo.: BORMTLM 020038 Hornpoll:
Regno.: 0061058343 INB: 0%

SDDD — OUTSPAN HVT000001
IDNo.: BORFHVT 000001 Hornpoll:
Regno.: 0046482923 INB: 0%

DS — ELANDSPRUIT CFH090061 - HAPOOR
IDNo.: BORMCFH 090061
Regno.: 0069070944
Section: SP
Labno.: U55340 INB: 0%
Hornpoll:

DSS — KETA TLM030021
IDNo.: BORMTLM 030021
Regno.: 0061035481
Section: SP
Labno.: U39471 INB: 0%
Hornpoll:

DSSS — MOGWOONI K6K2588
IDNo.: K6K2588 Hornpoll:
Regno.: 0049653603 INB: 0%

DSSD — OL PEJETA KPO 961
IDNo.: KPO961 Hornpoll:
Regno.: 0061025185 INB: 0%

D — CHAN-TE-MAR CTM1411
IDNo.: BORFCTM 140011
Regno.: 0079140828
Section: SP
Labno.: U200037 INB: 0%
Hornpoll:

DD — HOTSPOT FRIEDA
IDNo.: BORFHOT 070002
Regno.: 0065586265
Section: SP
Labno.: U55303 INB: 0%
Hornpoll:

DSD — GRASMERE 25 O
IDNo.: GF25O
Regno.: 0061168225
Section: SP
Labno.: P3597/04 INB: 0%
Hornpoll:

DSDS — GRASMERE 118J
IDNo.: GF118J D Hornpoll:
Regno.: 0061167144 INB: 0%

DSDD — GF 35J
IDNo.: GF35J Hornpoll:
Regno.: 0061167201 INB: 0%

DDS — BORGEN B 04001
IDNo.: BORMB 040001
Regno.: 0062885686
Section: SP
Labno.: UA20350 INB: 0%
Hornpoll:

DDSS — OL PEJETA 1017
IDNo.: KPO1017 Hornpoll:
Regno.: 0049843949 INB: 0%

DDSD — WORAGUS Z7F 2773
IDNo.: Z7F2773 Hornpoll:
Regno.: 0049784598 INB: 0%

DDD — BORGEN B 96 615
IDNo.: BORFB 960615
Regno.: 0038289005
Section: SP
Labno.: U25239 INB: 0%
Hornpoll:

DDDS — MOGWOONI K6K1383
IDNo.: K6K1383 Hornpoll:
Regno.: 0034659763 INB: 0%

DDDD — MUTARA ADC 8828
IDNo.: PB8828 Hornpoll:
Regno.: 0034729954 INB: 0%

LOT NR 34				
Verkoper	**Beskrywing**	**Aantal**	**Koper**	**Prys**
Stansim Simmentalers	Simmentaler Koei Oop - Kommersieël	1		

***CSS 2140**

LOT NR 35				
Verkoper	**Beskrywing**	**Aantal**	**Koper**	**Prys**
Stansim Simmentalers	Simmentaler Koei Oop - Kommersieël	1		

***CSS 2102**

LOT NR 36				
Verkoper	**Beskrywing**	**Aantal**	**Koper**	**Prys**
Stansim Simmentalers	Simmentaler Koei met bulkalf - Kommersieël	1+1		

***CSS 2176**

LOT NR 37				
Verkoper	**Beskrywing**	**Aantal**	**Koper**	**Prys**
Stansim Simmentalers	Simmentaler Vers Oop (loop by bul) - Kommersieël	1		

***MS 217**

LOT NR 38				
Verkoper	**Beskrywing**	**Aantal**	**Koper**	**Prys**
Stansim Simmentalers	Simmentaler Vers Oop (loop by bul) - Kommersieël	1		

***CSS 21226**

LOT NR 39				
Verkoper	**Beskrywing**	**Aantal**	**Koper**	**Prys**
Stansim Simmentalers	Simmentaler Vers Oop (loop by bul) - Kommersieël	1		

***MS 237**

LOT NR 40				
Verkoper	**Beskrywing**	**Aantal**	**Koper**	**Prys**
Pieter Albertyn	Jong Rooi Angus Vers Kommersieël	5		

***Inentings: Knoppiesvelsiekte, Lamsiekte**

LOT NR 41				
Verkoper	**Beskrywing**	**Aantal**	**Koper**	**Prys**
Pieter Albertyn	Jong Rooi Angus Vers Kommersieël	5		

***Inentings: Knoppiesvelsiekte, Lamsiekte**

LOT NR 42				
Verkoper	**Beskrywing**	**Aantal**	**Koper**	**Prys**
Pieter Albertyn	Jong Rooi Angus Vers Kommersieël	5		

***Inentings: Knoppiesvelsiekte, Lamsiekte**

LOT NR 43				
Verkoper	**Beskrywing**	**Aantal**	**Koper**	**Prys**
Pieter Albertyn	Jong Rooi Angus Vers Kommersieël	5		

***Inentings: Knoppiesvelsiekte, Lamsiekte**

LOT NR 44				
Verkoper	**Beskrywing**	**Aantal**	**Koper**	**Prys**
Pieter Albertyn	Jong Rooi Angus Vers Kommersieël	5		

***Inentings: Knoppiesvelsiekte, Lamsiekte**

LOT NR 45				
Verkoper	**Beskrywing**	**Aantal**	**Koper**	**Prys**
Pieter Albertyn	Jong Rooi Angus Vers Kommersieël	5		

***Inentings: Knoppiesvelsiekte, Lamsiekte**

LOT NR 46				
Verkoper	**Beskrywing**	**Aantal**	**Koper**	**Prys**
Pieter Albertyn	Jong Rooi Angus Vers Kommersieël	5		

***Inentings: Knoppiesvelsiekte, Lamsiekte**

N O T A S

.....

.....

.....

.....

.....

.....

.....

.....

.....

.....

.....

.....

.....

.....

.....

N O T A S

Dankie vir u teenwoordigheid.

Thank you for your support.

#VOORTREFLIKE DIENS

By BKB besef ons die belangrikheid van vertroue. 'n Vertroue dat die reën sal val en die grond 'n opbrengs sal lewer aan diegene wat dit bewerk. Ons weet vertroue kan nie gekoop word nie, maar word algaande verdien deur ons optrede en toewyding aan jou, in goeie en slegte tye. Ons is trots op die verhoudings wat ons oor geslagte met kliënte bou, almal gegrond op integriteit en gebind met 'n kyk in die oë en 'n stewige handdruk.

INTEGRITEIT

VOORTREFLIKE DIENS | ENTREPRENEURSKAP | VERDIENSTE | WERKNEMERS | OMGEWING

www.bkb.co.za

BKB

Die Betroubare Tuiste van Landbou

Laai gerus 'n gratis QR toep af om te skandeer